LC Chromatography Columns

Low Pressure to 1500psi
6mm to 50mm
to 2.5metre

analytical / semi Prep to PREP to Huge PREP

essentialLife Solutions

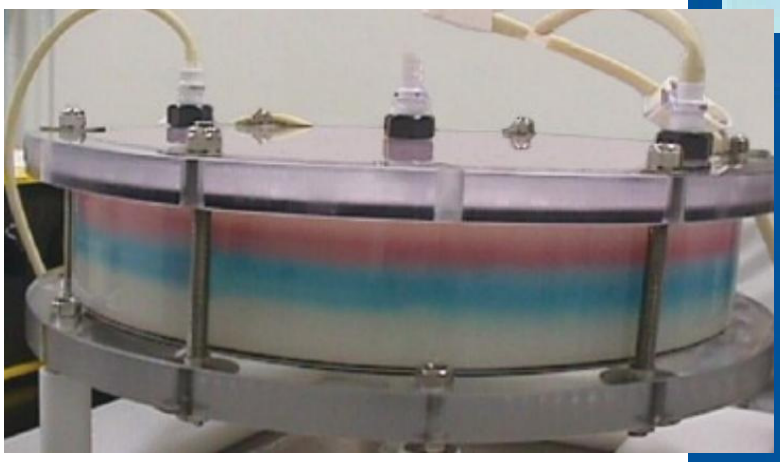

Econoline® Columns
Media_Flex® Columns
IsoKrom™ Columns
Upscale® Columns
Glass Series/Acrylic Series
Pumping Systems

CHROMalytic TECHnology Pty Ltd +61(0)3 9762 2034
Australian Distributors
Importers & Manufacurers
www.chromtech.net.au

Website NEW : www.chromalytic.com.au E-mail : info@chromtech.net.au Tel: 03 9762 2034 . . . in AUSTRALIA

essentialLife Solutions
for preparative chromatography

Versatile High-Performance

Econoline® Laboratory Glass Columns

for ion exchange, size exclusion, normal/reversed phase and affinity chromatography

Table of contents

General Description of Econoline columns 1

Advantages of Econoline® Columns 2

FAQs 3

Application examples 4

Product options 5

Specifications 6

Econoline® Series Glass Columns, AB-version, short/short plungers 7

Econoline® Series Glass Columns, AB-version, short/long plunger 8

Econoline® Series Glass Columns, AB-version, long/long plungers 9

Econoline® Series Glass Columns, SR-version, short/short plunger 10

Econoline® Series Glass Columns, SR-version, short/long plunger 11

Econoline® Series Glass Columns, SR-version, long/long plunger 12

Standard Accessories 13

Packing adapters 14

Column Couplers 15

Drawing Econoline® Glass columns (exploded view and parts named) 16

Econoline® glass bodies O-rings and plungers 17

Spare parts for Econoline® Series Glass Columns (frits) ..... 18 & 19

General information:

Any/all information contained within subject to change without notice.

General

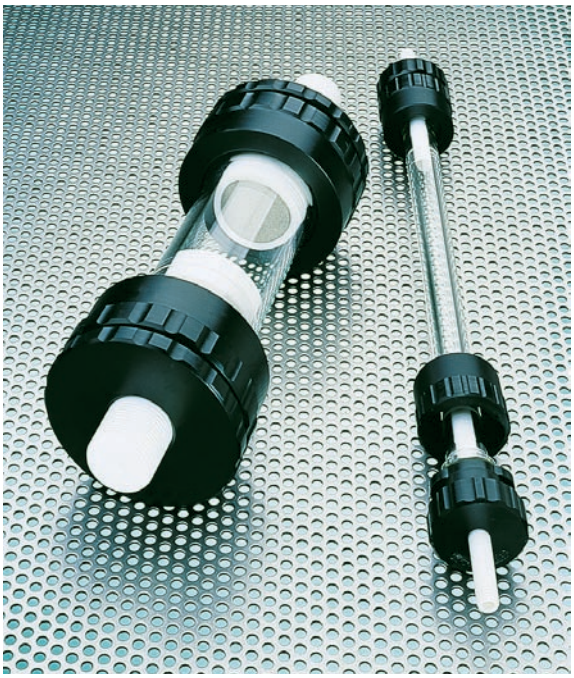

Biochromatography is widely applied in high-performance downstream processing techniques that can be used for a range of compounds, such as proteins, peptides or nucleic acids. When using various chromatographic techniques such as ion exchange, affinity or gel permeation chromatography, increasingly high-performance separation media are used and, as a result, higher demands are made on the quality of the column hardware.

Econoline® glass columns meet the highest criteria for professional laboratory use. Particular attention has been paid to the column volume ranges that are as wide as possible (0.4–982 ml) and to the high pressure resistance (up to 80 bar / 1160 psi), so that high flow rates and performance/efficiency can be achieved.
We have selected high-quality, inert materials to make sure Econoline® glass columns are biocompatible and offer the best conditions for high recovery with no loss of bio-activity of your biomolecules. Thanks to the "Quick-Lock" seal and the two adjustable pistons, the columns are fully adjustable and easy to use.

Given the wide range of diameters, frit porosities and lengths available, you can use Econoline® glass columns for the most diverse of applications.

Quick-Lock Fitting

No more than a quarter turn is needed to seal the column.
Piston height adjustment is done by turning the locked "Quick-Lock" fitting.

Advantages of Econoline® Glass Columns

1 HIGHER PRESSURE RATINGS INCORPORATING GLASS CONSTRUCTION

Pressures to 80 Bars (1,160 psig)
Full view of bed unlike stainless steel
Rugged construction for hard lab use

2 LINEAR MOTION OF PISTON

Due to true linear motion of piston there is no torsional load imposed on the packed bed assuring true linear compression.

3 TRUE FRITS

True frit without the use of sock design employed in less expensive columns assure even flow distribution across the bed.

4 ROBUST INLET AND OUTLET CONNECTIONS

Inlet and outlet connections are made at the exterior of the column, which provide a more reliable and visible connection.

5 FINE THREAD ADJUSTMENT

Columns are provided with fine thread adjustment of piston to allow for precise control of piston placement.

6 DOUBLE PISTON ADJUSTMENT

Standard double ended adjustable piston provides flexibility of bed settings and adjustment for settling and packing flexibility.

7 QUICK RELEASE ENDS

Design features our unique quick-disconnect end fittings making column disassembly effortless.

8 PRECISION BORE GLASS TUBE

Minimize "wall effect" due to precise bore.

9 EASY TO INSTALL PACKING ADAPTER

Installs in 5 seconds; user friendly.

"Connectivity and compatibility"

Two of the most frequently asked questions about using ELS glass columns are:

Question 1:

What packing materials can I use in ELS glass columns?

Answer:
In theory you can use any packing material from any manufacturer of your choice!
The only restrictions are those linked to the conditions of use with materials that come into contact with the media, such as the pressure limits of the column and packing material. To accommodate this, ELS offers a wide range of variants and different column versions. Our application laboratory has examples of applications in the fields of ion exchange, size exclusion, gel permeation, normal/reversed phase and affinity chromatography, etc. with an enormous range of phases from various manufacturers, including YMC, GE, Pall, Bio-Rad, Tosoh and others.

Question 2:

Can I link ELS glass columns to any LC system from other manufacturers, or can I only use ELS systems?

Answer:
Of course we would love you to use ELS glass columns as a "package" with ELS LC systems – but of course there are no restrictions! The accessory package included in ELS laboratory glass columns contains connectors and adaptors to link our columns to all current LC systems (e.g. GE Äkta).
As an option, we can supply special components such as "yellow" connection adaptors to convert from metric to imperial systems (M6 at 1/4-28).

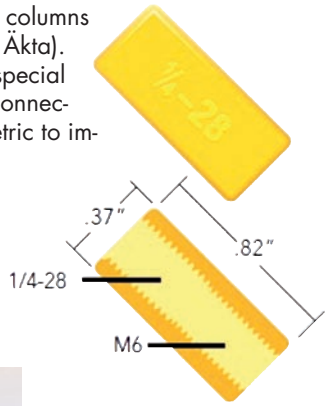

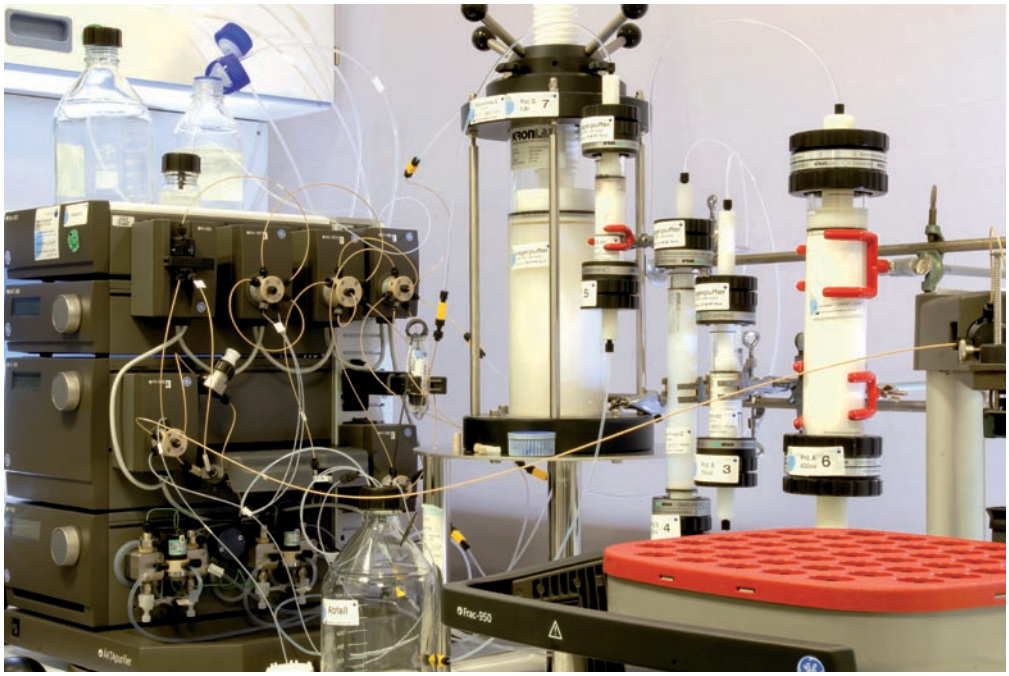

ELS laboratory glass columns in a "multi-purpose" application laboratory

Application Examples

In reversed phase and adsorption chromatography, the possibilities for using glass columns are often limited due to high back pressures generated by small particles. The high pressure resistance of the Econoline® glass columns allow you to achieve high flow rates for demanding separations. The example shows that this enables a considerable acceleration of the separation, which means that you can achieve significant time savings.

Separation of a standard test mixture of proteins

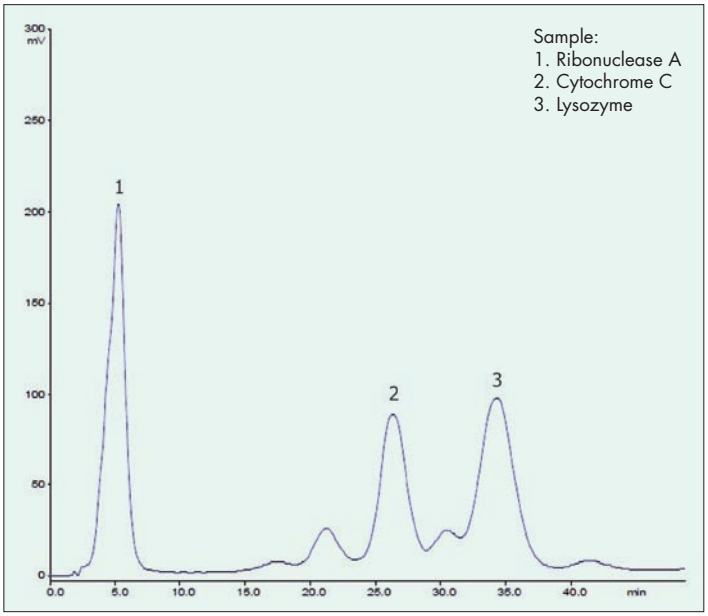

Column:	ELS Econoline® 250 x 15 mm ID
Stationary phase:	YMC-BioPro SP, 30 µm (bed length 170 mm)
Mobile phase:	A) 20 mM KH_2PO_4*K_2HPO_4 (pH 6.8)
	B) 20 mM KH_2PO_4*K_2HPO_4 (pH 6.8) containing 0.5 M NaCl
Gradient:	40-80% B
Flow rate:	6 ml/min
Temperature:	25°C
Detection:	UV at 220 nm
Injection:	100 µl

Example of application with reversed phase media

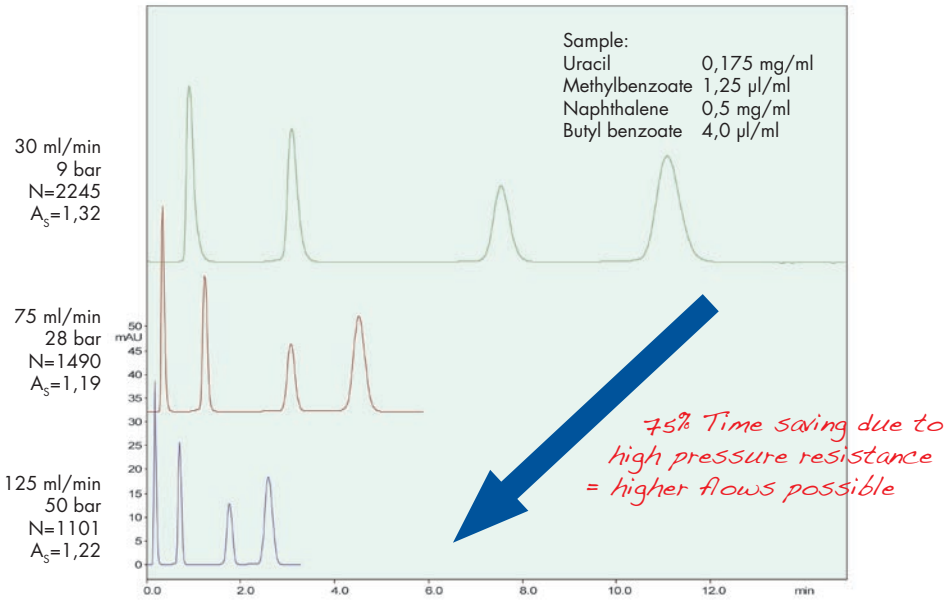

Column:	ELS Econoline® 125 x 25 mm ID
Stationary phase:	YMC-Pack ODS-AQ, 10 µm, 12 nm, 8 cm bed length
Flow rate:	30 ml/min - 75 ml/min - 125 ml/min
Mobile phase:	ACN/H_2O (50:50)
Injection:	500 µl
Detection:	UV at 254 nm

Product options

Econoline® laboratory glass columns are routinely available in three different lengths (125, 250, 500 mm) and three combinations of pistons (Short, Short/long, Long) in order to accommodate different volume configurations.


5 mm ID


10 mm ID


15 mm ID


25 mm ID


35 mm ID


50 mm ID

The modular construction allows for a range of piston variations to provide the ideal column volume.

Standard Version for aqueous buffers (AB)

Optional Version Solvant Resistant (SR)

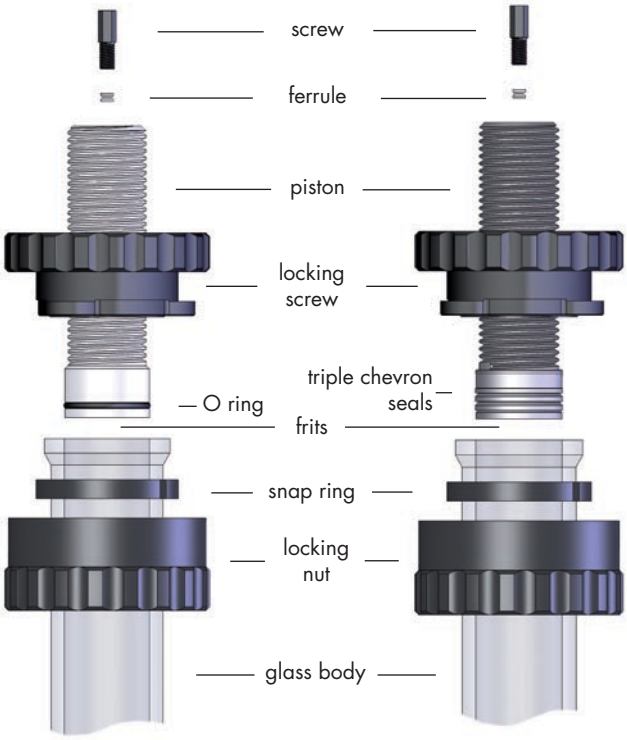

Econoline® glass columns are multi-purpose columns for all liquid chromatography applications (with pressure limits of 30 to 80 bar (435 to 1160 psi) - depending on column diameter as shown in the table on page 6). Econoline® glass columns are available in two versions:

Standard-Version (AB = Aqueous Buffer) for aqueous buffers and applications in cold rooms.

Optional-Version (SR = Solvent Resistant) for normal and reversed phase chromatography.

The height-adjustable pistons (standard) at each end of the Econoline® glass column with Teflon ribs (SR-version) are suitable for the entire spectrum of normal phase and reversed phase chromatography as well as biochromatography above ambient temperature.

All Econoline® glass columns are made with high-precision CNC machines and undergo several rigorous quality controls before they are delivered.

Specifications

Aqueous buffer (AB) - version

Temperature range	4 - 40 °C
Plunger	PE (polyethylene)
Sealing	O-ring, EPDM (ethylene propylene diene monomer rubber)
Frit	PE (polyethylene)
Height adjustment	short plungers, short/long plunger, long plungers (see table)
Connections	1/4"-28G female screw thread

Solvent resistant (SR) - version

Temperature range	16 - 40 °C
Plunger	PTFE (polytetrafluorethylene)
Sealing	PTFE triple chevrons
Frit	ID 5 - 15 mm: sintered glass ID 25 - 50 mm: stainless steel
Height adjustment	short plungers, short/long plunger, long plungers (see table)
Connections	1/4"-28G female screw thread

Bed length / Volume

ID [mm]	Pressure limit [bar]	short plungers		short/long plunger		long plungers	
		Bed length [mm]	Volume [ml]	Bed length [mm]	Volume [ml]	Bed length [mm]	Volume [ml]
5	AB = 80 SR = 80	22 - 125 147 - 250 397 - 500	0,4 - 2,5 2,9 - 4,9 7,8 - 9,8	0 - 125 67 - 250 317 - 500	0 - 2,5 1,3 - 4,9 6,2 - 9,8	0 - 125 0 - 250 237 - 500	0 - 2,5 0 - 4,9 4,7 - 9,8
10	AB = 80 SR = 50	32 - 125 157 - 250 407 - 500	2,5 - 9,8 12 - 20 32 - 39	0 - 125 77 - 250 327 - 500	0 - 9,8 6,0 - 20 26 - 39	0 - 125 0 - 250 247 - 500	0 - 9,8 0 - 20 19 - 39
15	AB = 70 SR = 50	24 - 125 149 - 250 399 - 500	4,2 - 22 26 - 44 71 - 88	0 - 125 69 - 250 319 - 500	0 - 22 12 - 44 56 - 88	0 - 125 0 - 250 239 - 500	0 - 22 0 - 44 42 - 88
25	AB = 50 SR = 50	28 - 125 153 - 250 403 - 500	14 - 61 75 - 123 198 - 245	0 - 125 73 - 250 323 - 500	0 - 61 36 - 123 159 - 245	0 - 125 0 - 250 243 - 500	0 - 61 0 - 123 119 - 245
35	AB = 40 SR = 40	30 - 125 155 - 250 405 - 500	29 - 120 149 - 241 390 - 481	0 - 125 75 - 250 325 - 500	0 - 120 72 - 241 313 - 481	0 - 125 0 - 250 245 - 500	0 - 120 0 - 241 236 - 481
50	AB = 30 SR = 25	36 - 125 161 - 250 410 - 500	71 - 245 316 - 491 805 - 982	0 - 125 81 - 250 331 - 500	0 - 245 159 - 491 650 - 982	0 - 125 0 - 250 250 - 500	0 - 245 0 - 491 491 - 982

Econoline® Series Glass Columns, AB-version, short/short plungers

Temperature range	4 - 40 °C
Plunger	PE (polyethylene)
Sealing	O-ring, EPDM
Frit	ID 5 - 50 mm: polyethylene (10 µm or 5 µm)
Height adjustment	short plungers

	Part No.	ID [mm]	Pressure limit [bar]	Bed length [mm]	Volume [ml]	Frit material	Frit porosity [µm]
5 mm ID	TAC05/125SSPE0-AB-2	5	80	22 - 125	0.4 - 2.5	polyethylene	10
	TAC05/250SSPE0-AB-2	5	80	147 - 250	2.9 - 4.9	polyethylene	10
	TAC05/500SSPE0-AB-2	5	80	397 - 500	7.8 - 9.8	polyethylene	10
	TAC05/125SSPE5-AB-2	5	80	22 - 125	0.4 - 2.5	polyethylene	5
	TAC05/250SSPE5-AB-2	5	80	147 - 250	2.9 - 4.9	polyethylene	5
	TAC05/500SSPE-AB-2	5	80	397 - 500	7.8 - 9.8	polyethylene	5
10 mm ID	TAC10/125SSPE0-AB-2	10	80	32 - 125	2.5 - 9.8	polyethylene	10
	TAC10/250SSPE0-AB-2	10	80	157 - 250	12 - 20	polyethylene	10
	TAC10/500SSPE0-AB-2	10	80	407 - 500	32 - 39	polyethylene	10
	TAC10/125SSPE5-AB-2	10	80	32 - 125	2.5 - 9.8	polyethylene	5
	TAC10/250SSPE5-AB-2	10	80	157 - 250	12 - 20	Polyethylene	5
	TAC10/500SSPE5-AB-2	10	80	407 - 500	32 - 39	Polyethylene	5
15 mm ID	TAC15/125SSPE0-AB-2	15	70	24 - 125	4.2 - 22	polyethylene	10
	TAC15/250SSPE0-AB-2	15	70	149 - 250	26 - 44	polyethylene	10
	TAC15/500SSPE0-AB-2	15	70	399 - 500	71 - 88	polyethylene	10
	TAC15/125SSPE5-AB-2	15	70	24 - 125	4.2 - 22	polyethylene	5
	TAC15/250SSPE5-AB-2	15	70	149 - 250	26 - 44	polyethylene	5
	TAC15/500SSPE5-AB-2	15	70	399 - 500	71 - 88	polyethylene	5
25 mm ID	TAC25/125SSPE0-AB-2	25	50	28 - 125	14 - 61	polyethylene	10
	TAC25/250SSPE0-AB-2	25	50	153 - 250	75 - 123	polyethylene	10
	TAC25/500SSPE0-AB-2	25	50	403 - 500	198 - 245	polyethylene	10
	TAC25/125SSPE5-AB-2	25	50	28 - 125	14 - 61	polyethylene	5
	TAC25/250SSPE5-AB-2	25	50	153 - 250	75 - 123	polyethylene	5
	TAC25/500SSPE5-AB-2	25	50	403 - 500	198 - 245	polyethylene	5
35 mm ID	TAC35/125SSPE0-AB-2	35	40	30 - 125	29 - 120	polyethylene	10
	TAC35/250SSPE0-AB-2	35	40	155 - 250	149 - 241	polyethylene	10
	TAC35/500SSPE0-AB-2	35	40	405 - 500	390 - 481	polyethylene	10
	TAC35/125SSPE5-AB-2	35	40	30 - 125	29 - 120	polyethylene	5
	TAC35/250SSPE5-AB-2	35	40	155 - 250	149 - 241	polyethylene	5
	TAC35/500SSPE5-AB-2	35	40	405 - 500	390 - 481	polyethylene	5
50 mm ID	TAC50/125SSPE0-AB-2	50	30	36 - 125	71 - 245	polyethylene	10
	TAC50/250SSPE0-AB-2	50	30	161 - 250	316 - 491	polyethylene	10
	TAC50/500SSPE0-AB-2	50	30	410 - 500	805 - 982	polyethylene	10
	TAC50/125SSPE5-AB-2	50	30	36 - 125	71 - 245	polyethylene	5
	TAC50/250SSPE5-AB-2	50	30	161 - 250	316 - 491	polyethylene	5
	TAC50/500SSPE5-AB-2	50	30	410 - 500	805 - 982	polyethylene	5

Econoline® Series Glass Columns, AB-version, short/long plunger

Temperature range	4 - 40 °C
Plunger	PE (polyethylene)
Sealing	O-ring, EPDM
Frit	ID 5 - 50 mm: polyethylene (10 µm or 5 µm)
Height adjustment	short / long plunger

	Part No.	ID [mm]	Pressure limit [bar]	Bed length [mm]	Volume [ml]	Frit material	Frit porosity [µm]
5 mm ID	TAC05/125SLPE0-AB-2	5	80	0 - 125	0 - 2.5	polyethylene	10
	TAC05/250SLPE0-AB-2	5	80	67 - 250	1.3 - 4.9	polyethylene	10
	TAC05/500SLPE0-AB-2	5	80	317 - 500	6.2 - 9.8	polyethylene	10
	TAC05/125SLPE5-AB-2	5	80	0 - 125	0 - 2.5	polyethylene	5
	TAC05/250SLPE5-AB-2	5	80	67 - 250	1.3 - 4.9	polyethylene	5
	TAC05/500SLPE5-AB-2	5	80	317 - 500	6.2 - 9.8	polyethylene	5
10 mm ID	TAC10/125SLPE0-AB-2	10	80	0 - 125	0 - 9.8	polyethylene	10
	TAC10/250SLPE0-AB-2	10	80	77 - 250	6.0 - 20	polyethylene	10
	TAC10/500SLPE0-AB-2	10	80	327 - 500	26 - 39	polyethylene	10
	TAC10/125SLPE5-AB-2	10	80	0 - 125	0 - 9.8	polyethylene	5
	TAC10/250SLPE5-AB-2	10	80	77 - 250	6.0 - 20	polyethylene	5
	TAC10/500SLPE5-AB-2	10	80	327 - 500	26 - 39	polyethylene	5
15 mm ID	TAC15/125SLPE0-AB-2	15	70	0 - 125	0 - 22	polyethylene	10
	TAC15/250SLPE0-AB-2	15	70	69 - 250	12 - 44	polyethylene	10
	TAC15/500SLPE0-AB-2	15	70	319 - 500	56 - 88	polyethylene	10
	TAC15/125SLPE5-AB-2	15	70	0 - 125	0 - 22	polyethylene	5
	TAC15/250SLPE5-AB-2	15	70	69 - 250	12 - 44	polyethylene	5
	TAC15/500SLPE5-AB-2	15	70	319 - 500	56 - 88	polyethylene	5
25 mm ID	TAC25/125SLPE0-AB-2	25	50	0 - 125	0 - 61	polyethylene	10
	TAC25/250SLPE0-AB-2	25	50	73 - 250	36 - 123	polyethylene	10
	TAC25/500SLPE0-AB-2	25	50	323 - 500	159 - 245	polyethylene	10
	TAC25/125SLPE5-AB-2	25	50	0 - 125	0 - 61	polyethylene	5
	TAC25/250SLPE5-AB-2	25	50	73 - 250	36 - 123	polyethylene	5
	TAC25/500SLPE5-AB-2	25	50	323 - 500	159 - 245	polyethylene	5
35 mm ID	TAC35/125SLPE0-AB-2	35	40	0 - 125	0 - 120	polyethylene	10
	TAC35/250SLPE0-AB-2	35	40	75 - 250	72 - 241	polyethylene	10
	TAC35/500SLPE0-AB-2	35	40	325 - 500	313 - 481	polyethylene	10
	TAC35/125SLPE5-AB-2	35	40	0 - 125	0 - 120	polyethylene	5
	TAC35/250SLPE5-AB-2	35	40	75 - 250	72 - 241	polyethylene	5
	TAC35/500SLPE5-AB-2	35	40	325 - 500	313 - 481	polyethylene	5
50 mm ID	TAC50/125SLPE0-AB-2	50	30	0 - 125	0 - 245	polyethylene	10
	TAC50/250SLPE0-AB-2	50	30	81 - 250	159 - 491	polyethylene	10
	TAC50/500SLPE0-AB-2	50	30	331 - 500	650 - 982	polyethylene	10
	TAC50/125SLPE5-AB-2	50	30	0 - 125	0 - 245	polyethylene	5
	TAC50/250SLPE5-AB-2	50	30	81 - 250	159 - 491	polyethylene	5
	TAC50/500SLPE5-AB-2	50	30	331 - 500	650 - 982	polyethylene	5

Econoline® Series Glass Columns, AB-version, long/long plungers

Temperature range	4 - 40 °C
Plunger	PE (polyethylene)
Sealing	O-ring, EPDM
Frit	ID 5 - 50 mm: polyethylene (10 µm or 5 µm)
Height adjustment	long plungers

	Part No.	ID [mm]	Pressure limit [bar]	Bed length [mm]	Volume [ml]	Frit material	Frit porosity [µm]
5 mm ID	TAC05/125LLPE0-AB-2	5	80	0 - 125	0 - 2.5	polyethylene	10
	TAC05/250LLPE0-AB-2	5	80	0 - 250	0 - 4.9	polyethylene	10
	TAC05/500LLPE0-AB-2	5	80	237 - 500	4.7 - 9.8	Polyethylen	10
	TAC05/125LLPE5-AB-2	5	80	0 - 125	0 - 2.5	polyethylene	5
	TAC05/250LLPE5-AB-2	5	80	0 - 250	0 - 4.9	polyethylene	5
	TAC05/500LLPE5-AB-2	5	80	237 - 500	4.7 - 9.8	polyethylene	5
10 mm ID	TAC10/z-AB-2	10	80	0 - 125	0 - 9.8	polyethylene	10
	TAC10/250LLPE0-AB-2	10	80	0 - 250	0 - 20	polyethylene	10
	TAC10/500LLPE0-AB-2	10	80	247 - 500	19 - 39	polyethylene	10
	TAC10/125LLPE5-AB-2	10	80	0 - 125	0 - 9.8	polyethylene	5
	TAC10/250LLPE5-AB-2	10	80	0 - 250	0 - 20	polyethylene	5
	TAC10/500LLPE5-AB-2	10	80	247 - 500	19 - 39	polyethylene	5
15 mm ID	TAC15/125LLPE0-AB-2	15	70	0 - 125	0 - 22	polyethylene	10
	TAC15/250LLPE0-AB-2	15	70	0 - 250	0 - 44	polyethylene	10
	TAC15/500LLPE0-AB-2	15	70	239 - 500	42 - 88	polyethylene	10
	TAC15/125LLPE5-AB-2	15	70	0 - 125	0 - 22	polyethylene	5
	TAC15/250LLPE5-AB-2	15	70	0 - 250	0 - 44	polyethylene	5
	TAC15/500LLPE5-AB-2	15	70	239 - 500	42 - 88	polyethylene	5
25 mm ID	TAC25/125LLPE0-AB-2	25	50	0 - 125	0 - 61	polyethylene	10
	TAC25/250LLPE0-AB-2	25	50	0 - 250	0 - 123	polyethylene	10
	TAC25/500LLPE0-AB-2	25	50	243 - 500	119 - 245	polyethylene	10
	TAC25/125LLPE5-AB-2	25	50	0 - 125	0 - 61	polyethylene	5
	TAC25/250LLPE5-AB-2	25	50	0 - 250	0 - 123	polyethylene	5
	TAC25/500LLPE5-AB-2	25	50	243 - 500	119 - 245	polyethylene	5
35 mm ID	TAC35/125LLPE0-AB-2	35	40	0 - 125	0 - 120	polyethylene	10
	TAC35/250LLPE0-AB-2	35	40	0 - 250	0 - 241	polyethylene	10
	TAC35/500LLPE0-AB-2	35	40	245 - 500	236 - 481	polyethylene	10
	TAC35/125LLPE5-AB-2	35	40	0 - 125	0 - 120	polyethylene	5
	TAC35/250LLPE5-AB-2	35	40	0 - 250	0 - 241	polyethylene	5
	TAC35/500LLPE5-AB-2	35	40	245 - 500	236 - 481	polyethylene	5
50 mm ID	TAC50/125LLPE0-AB-2	50	30	0 - 125	0 - 245	polyethylene	10
	TAC50/250LLPE0-AB-2	50	30	0 - 250	0 - 491	polyethylene	10
	TAC50/500LLPE0-AB-2	50	30	250 - 500	491 - 982	polyethylene	10
	TAC50/125LLPE5-AB-2	50	30	0 - 125	0 - 245	polyethylene	5
	TAC50/250LLPE5-AB-2	50	30	0 - 250	0 - 491	polyethylene	5
	TAC50/500LLPE5-AB-2	50	30	250 - 500	491 - 982	polyethylene	5

Econoline® Series Glass Columns, SR-version, short/short plungers

Temperature range	16 - 40 °C
Plunger	PTFE
Sealing	PTFE triple chevrons
Frit	ID 5 - 15 mm: sintered glass (10 µm or 2 µm) ID 25 - 50 mm:s tainless steel (10 µm or 2 µm)
Height adjustment	short plungers

	Part No.	ID [mm]	Pressure limit [bar]	Bed length [mm]	Volume [ml]	Frit material	Frit porosity [µm]
5 mm ID	TAC05/125SSG0-SR-3	5	80	22 - 125	0.4 - 2.5	sintered glass	10
	TAC05/250SSG0-SR-3	5	80	147 - 250	2.9 - 4.9	sintered glass	10
	TAC05/500SSG0-SR-3	5	80	397 - 500	7.8 - 9.8	sintered glass	10
	TAC05/125SSG2-SR-3	5	80	22 - 125	0.4 - 2.5	sintered glass	2
	TAC05/250SSG2-SR-3	5	80	147 - 250	2.9 - 4.9	sintered glass	2
	TAC05/500SSG2-SR-3	5	80	397 - 500	7.8 - 9.8	sintered glass	2
10 mm ID	TAC10/125SSG0-SR-3	10	50	32 - 125	2.5 - 9.8	sintered glass	10
	TAC10/250SSG0-SR-3	10	50	157 - 250	12 - 20	sintered glass	10
	TAC10/500SSG0-SR-3	10	50	407 - 500	32 - 39	sintered glass	10
	TAC10/125SSG2-SR-3	10	50	32 - 125	2.5 - 9.8	sintered glass	2
	TAC10/250SSG2-SR-3	10	50	157 - 250	12 - 20	sintered glass	2
	TAC10/500SSG2-SR-3	10	50	407 - 500	32 - 39	sintered glass	2
15 mm ID	TAC15/125SSG0-SR-3	15	50	24 - 125	4.2 - 22	sintered glass	10
	TAC15/250SSG0-SR-3	15	50	149 - 250	26 - 44	sintered glass	10
	TAC15/500SSG0-SR-3	15	50	399 - 500	71 - 88	sintered glass	10
	TAC15/125SSG2-SR-3	15	50	24 - 125	4.2 - 22	sintered glass	2
	TAC15/250SSG2-SR-3	15	50	149 - 250	26 - 44	sintered glass	2
	TAC15/500SSG2-SR-3	15	50	399 - 500	71 - 88	sintered glass	2
25 mm ID	TAC25/125SSS0-SR-3	25	50	28 - 125	14 - 61	stainless steel	10
	TAC25/250SSS0-SR-3	25	50	153 - 250	75 - 123	stainless steel	10
	TAC25/500SSS0-SR-3	25	50	403 - 500	198 - 245	stainless steel	10
	TAC25/125SSS2-SR-3	25	50	28 - 125	14 - 61	stainless steel	2
	TAC25/250SSS2-SR-3	25	50	153 - 250	75 - 123	stainless steel	2
	TAC25/500SSS2-SR-3	25	50	403 - 500	198 - 245	stainless steel	2
35 mm ID	TAC35/125SSS0-SR-3	35	40	30 - 125	29 - 120	stainless steel	10
	TAC35/250SSS0-SR-3	35	40	155 - 250	149 - 241	stainless steel	10
	TAC35/500SSS0-SR-3	35	40	405 - 500	390 - 481	stainless steel	10
	TAC35/125SSS2-SR-3	35	40	30 - 125	29 - 120	stainless steel	2
	TAC35/250SSS2-SR-3	35	40	155 - 250	149 - 241	stainless steel	2
	TAC35/500SSS2-SR-3	35	40	405 - 500	390 - 481	stainless steel	2
50 mm ID	TAC50/125SSS0-SR-3	50	25	36 - 125	71 - 245	stainless steel	10
	TAC50/250SSS0-SR-3	50	25	161 - 250	316 - 491	stainless steel	10
	TAC50/500SSS0-SR-3	50	25	410 - 500	805 - 982	stainless steel	10
	TAC50/125SSS2-SR-3	50	25	36 - 125	71 - 245	stainless steel	2
	TAC50/250SSS2-SR-3	50	25	161 - 250	316 - 491	stainless steel	2
	TAC50/500SSS2-SR-3	50	25	410 - 500	805 - 982	stainless steel	2

Econoline® Series Glass Columns, SR-version, short/long plunger

Temperature range	16 - 40 °C
Plunger	PTFE
Sealing	PTFE triple chevrons
Frit	ID 5 - 15 mm: sintered glass (10 µm or 2 µm) ID 25 - 50 mm: stainless steel (10 µm or 2 µm)
Height adjustment	short / long plunger

	Part No.	ID [mm]	Pressure limit [bar]	Bed length [mm]	Volume [ml]	Frit material	Frit porosity [µm]
5 mm ID	TAC05/125SLG0-SR-3	5	80	0 - 125	0 - 2.5	sintered glass	10
	TAC05/250SLG0-SR-3	5	80	67 - 250	1.3 - 4.9	sintered glass	10
	TAC05/500SLG0-SR-3	5	80	317 - 500	6.2 - 9.8	sintered glass	10
	TAC05/125SLG2-SR-3	5	80	0 - 125	0 - 2.5	sintered glass	2
	TAC05/250SLG2-SR-3	5	80	67 - 250	1.3 - 4.9	sintered glass	2
	TAC05/500SLG2-SR-3	5	80	317 - 500	6.2 - 9.8	sintered glass	2
10 mm ID	TAC10/125SLG0-SR-3	10	50	0 - 125	0 - 9.8	sintered glass	10
	TAC10/250SLG0-SR-3	10	50	77 - 250	6.0 - 20	sintered glass	10
	TAC10/500SLG0-SR-3	10	50	327 - 500	26 - 39	sintered glass	10
	TAC10/125SLG2-SR-3	10	50	0 - 125	0 - 9.8	sintered glass	2
	TAC10/250SLG2-SR-3	10	50	77 - 250	6.0 - 20	sintered glass	2
	TAC10/500SLG2-SR-3	10	50	327 - 500	26 - 39	sintered glass	2
15 mm ID	TAC15/125SLG0-SR-3	15	50	0 - 125	0 - 22	sintered glass	10
	TAC15/250SLG0-SR-3	15	50	69 - 250	12 - 44	sintered glass	10
	TAC15/500SLG0-SR-3	15	50	319 - 500	56 - 88	sintered glass	10
	TAC15/125SLG2-SR-3	15	50	0 - 125	0 - 22	sintered glass	2
	TAC15/250SLG2-SR-3	15	50	69 - 250	12 - 44	sintered glass	2
	TAC15/500SLG2-SR-3	15	50	319 - 500	56 - 88	sintered glass	2
25 mm ID	TAC25/125SLS0-SR-3	25	50	0 - 125	0 - 61	stainless steel	10
	TAC25/250SLS0-SR-3	25	50	73 - 250	36 - 123	stainless steel	10
	TAC25/500SLS0-SR-3	25	50	323 - 500	159 - 245	stainless steel	10
	TAC25/125SLS2-SR-3	25	50	0 - 125	0 - 61	stainless steel	2
	TAC25/250SLS2-SR-3	25	50	73 - 250	36 - 123	stainless steel	2
	TAC25/500SLS2-SR-3	25	50	323 - 500	159 - 245	stainless steel	2
35 mm ID	TAC35/125SLS0-SR-3	35	40	0 - 125	0 - 120	stainless steel	10
	TAC35/250SLS0-SR-3	35	40	75 - 250	72 - 241	stainless steel	10
	TAC35/500SLS0-SR-3	35	40	325 - 500	313 - 481	stainless steel	10
	TAC35/125SLS2-SR-3	35	40	0 - 125	0 - 120	stainless steel	2
	TAC35/250SLS2-SR-3	35	40	75 - 250	72 - 241	stainless steel	2
	TAC35/500SLS2-SR-3	35	40	325 - 500	313 - 481	stainless steel	2
50 mm ID	TAC50/125SLS0-SR-3	50	25	0 - 125	0 - 245	stainless steel	10
	TAC50/250SLS0-SR-3	50	25	81 - 250	159 - 491	stainless steel	10
	TAC50/500SLS0-SR-3	50	25	331 - 500	650 - 982	stainless steel	10
	TAC50/125SLS2-SR-3	50	25	0 - 125	0 - 245	stainless steel	2
	TAC50/250SLS2-SR-3	50	25	81 - 250	159 - 491	stainless steel	2
	TAC50/500SLS2-SR-3	50	25	331 - 500	650 - 982	stainless steel	2

Econoline® Series Glass Columns, SR-version, long/long plungers

Temperature range	16 - 40 °C
Plunger	PTFE
Sealing	PTFE triple chevrons
Frit	ID 5 - 15 mm: sintered glass (10 µm or 2 µm) ID 25 - 50 mm: stainless steel (10 µm or 2 µm)
Height adjustment	long plungers

	Part No.	ID [mm]	Pressure limit [bar]	Bed length [mm]	Volume [ml]	Frit material	Frit porosity [µm]
5 mm ID	TAC05/125LLG0-SR-3	5	80	0 - 125	0 - 2.5	sintered glass	10
	TAC05/250LLG0-SR-3	5	80	0 - 250	0 - 4.9	sintered glass	10
	TAC05/500LLG0-SR-3	5	80	237 - 500	4.7 - 9.8	sintered glass	10
	TAC05/125LLG2-SR-3	5	80	0 - 125	0 - 2.5	sintered glass	2
	TAC05/250LLG2-SR-3	5	80	0 - 250	0 - 4.9	sintered glass	2
	TAC05/500LLG2-SR-3	5	80	237 - 500	4.7 - 9.8	sintered glass	2
10 mm ID	TAC10/125LLG0-SR-3	10	50	0 - 125	0 - 9.8	sintered glass	10
	TAC10/250LLG0-SR-3	10	50	0 - 250	0 - 20	sintered glass	10
	TAC10/500LLG0-SR-3	10	50	247 - 500	19 - 39	sintered glass	10
	TAC10/125LLG2-SR-3	10	50	0 - 125	0 - 9.8	sintered glass	2
	TAC10/250LLG2-SR-3	10	50	0 - 250	0 - 20	sintered glass	2
	TAC10/500LLG2-SR-3	10	50	247 - 500	19 - 39	sintered glass	2
15 mm ID	TAC15/125LLG0-SR-3	15	50	0 - 125	0 - 22	sintered glass	10
	TAC15/250LLG0-SR-3	15	50	0 - 250	0 - 44	sintered glass	10
	TAC15/500LLG0-SR-3	15	50	239 - 500	42 - 88	sintered glass	10
	TAC15/125LLG2-SR-3	15	50	0 - 125	0 - 22	sintered glass	2
	TAC15/250LLG2-SR-3	15	50	0 - 250	0 - 44	sintered glass	2
	TAC15/500LLG2-SR-3	15	50	239 - 500	42 - 88	sintered glass	2
25 mm ID	TAC25/125LLS0-SR-3	25	50	0 - 125	0 - 61	stainless steel	10
	TAC25/250LLS0-SR-3	25	50	0 - 250	0 - 123	stainless steel	10
	TAC25/500LLS0-SR-3	25	50	243 - 500	119 - 245	stainless steel	10
	TAC25/125LLS2-SR-3	25	50	0 - 125	0 - 61	stainless steel	2
	TAC25/250LLS2-SR-3	25	50	0 - 250	0 - 123	stainless steel	2
	TAC25/500LLS2-SR-3	25	50	243 - 500	119 - 245	stainless steel	2
35 mm ID	TAC35/125LLS0-SR-3	35	40	0 - 125	0 - 120	stainless steel	10
	TAC35/250LLS0-SR-3	35	40	0 - 250	0 - 241	stainless steel	10
	TAC35/500LLS0-SR-3	35	40	245 - 500	236 - 481	stainless steel	10
	TAC35/125LLS2-SR-3	35	40	0 - 125	0 - 120	stainless steel	2
	TAC35/250LLS2-SR-3	35	40	0 - 250	0 - 241	stainless steel	2
	TAC35/500LLS2-SR-3	35	40	245 - 500	236 - 481	stainless steel	2
50 mm ID	TAC50/125LLS0-SR-3	50	25	0 - 125	0 - 245	stainless steel	10
	TAC50/250LLS0-SR-3	50	25	0 - 250	0 - 491	stainless steel	10
	TAC50/500LLS0-SR-3	50	25	250 - 500	491 - 982	stainless steel	10
	TAC50/125LLS2-SR-3	50	25	0 - 125	0 - 245	stainless steel	2
	TAC50/250LLS2-SR-3	50	25	0 - 250	0 - 491	stainless steel	2
	TAC50/500LLS2-SR-3	50	25	250 - 500	491 - 982	stainless steel	

Columns supplied with:

for ID 5 mm:

1x 1 m Tefzel tubing 1/16". pre-attached
4x 1/4"-28G nut and ferrule for 1/16" tubing
2x M6 nut and ferrule for 1/16" tubing
2x 10-32 nut/ferrule for 1/16" tubing
2x plugs, PTFE (1/4"-28G)

for ID 10 - 15 mm:

1x 1 m 1/16" FEP tubing (0.8 x 1.6 mm)
4x 1/4"-28G nut and ferrule for 1/16" tubing
2x M6 nut and ferrule for 1/16" tubing
2x 10-32 nut/ferrule for 1/16" tubing
1x frit removal tool
2x plugs, PTFE (1/4"-28G)

for ID 25 - 50 mm:

1x 1 m 1/8" FEP tubing (1.6 x 3.2 mm)
4x 1/4"-28G nut and 4x ferrule for 1/8" tubing
2x M6 nut and ferrule for 1/8" tubing
1x frit removal tool
2x plugs, PTFE (1/4"-28G)

Tubing should be connected to the Econoline® Glass Columns with following screws:

for tubing with 1/16" outer diameter:

ELS-R-55050	Nut 1/4"-28 G
ELS-JR-CFL-CB1KF-S	Ferrule, collapsible 1/16"

for tubing with 1/8" outer diameter:

ELS-JR-55051	Nut 1/4"-28 G
ELS-JR-CFL-CB2KF-S	Ferrule, collapsible 1/8"

IMPORTANT!
2 Screws with metric threads are also supplied with the accessories packages (ELS-K.P207 / ELS-K.P200N oder ELS-K.P307 / ELS-K.P300N). These screws are not suitable for connection to the glass columns as they will damage the thread in the pistons!
They are to allow the columns to be connected to pumps, etc. fitted with metric threads.

Packing Adapters for Econoline® Glass Columns

These consist of a coupling unit and glass body of same column ID as column to be packed

Coupling units consiting of:
- **Econoline®** coupling unit assembly with PTFE insert
- Counter screw (thread) with retaining ring
- Counter screw (bayonet) with retaining ring
- AB-version with two sets (4 pieces) Viton O-rings
- SR-version with two Kalrez® O-rings

Packing Adapters AB-version

Part No.	for column ID [mm]
PAK05/125-AB	5
PAK05/250-AB	5
PAK05/500-AB	5
PAK10/125-AB	10
PAK10/250-AB	10
PAK10/500-AB	10
PAK15/125-AB	15
PAK15/250-AB	15
PAK15/500-AB	15
PAK25/125-AB	25
PAK25/250-AB	25
PAK25/500-AB	25
PAK35/125-AB	35
PAK35/250-AB	35
PAK35/500-AB	35
PAK50/125-AB	50
PAK50/250-AB	50
PAK50/500-AB	50

Packing Adapters SR-version

Part No.	for column ID [mm]
PAK05/125-SR	5
PAK05/250-SR	5
PAK05/500-SR	5
PAK10/125-SR	10
PAK10/250-SR	10
PAK10/500-SR	10
PAK15/125-SR	15
PAK15/250-SR	15
PAK15/500-SR	15
PAK25/125-SR	25
PAK25/250-SR	25
PAK25/500-SR	25
PAK35/125-SR	35
PAK35/250-SR	35
PAK35/500-SR	35
PAK50/125-SR	50
PAK50/250-SR	50
PAK50/500-SR	50

Coupling units AB-version

Part No.	for column ID [mm]
TAC05KU-AB	5
TAC10KU-AB	10
TAC15KU-AB	15
TAC25KU-AB	25
TAC35KU-AB	35
TAC50KU-AB	50

Coupling units SR-version

Part No.	for column ID [mm]
TAC05KU-SR	5
TAC10KU-SR	10
TAC15KU-SR	15
TAC25KU-SR	25
TAC35KU-SR	35
TAC50KU-SR	50

O-ring (Viton) for coupling units AB-version, pack of 2

Part No.	for column ID [mm]
TAC05KU03V/P2	5
TAC10KU03V/P2	10
TAC15KU03V/P2	15
TAC25KU03V/P2	25
TAC35KU03V/P2	35
TAC50KU03V/P2	50

O-ring (Kalrez®) for coupling units SR-version, pack of 2

Part No.	for column ID [mm]
TAC05KU03K/P2	5
TAC10KU03K/P2	10
TAC15KU03K/P2	15
TAC25KU03K/P2	25
TAC35KU03K/P2	35
TAC50KU03K/P2	50

Econoline® AB-version

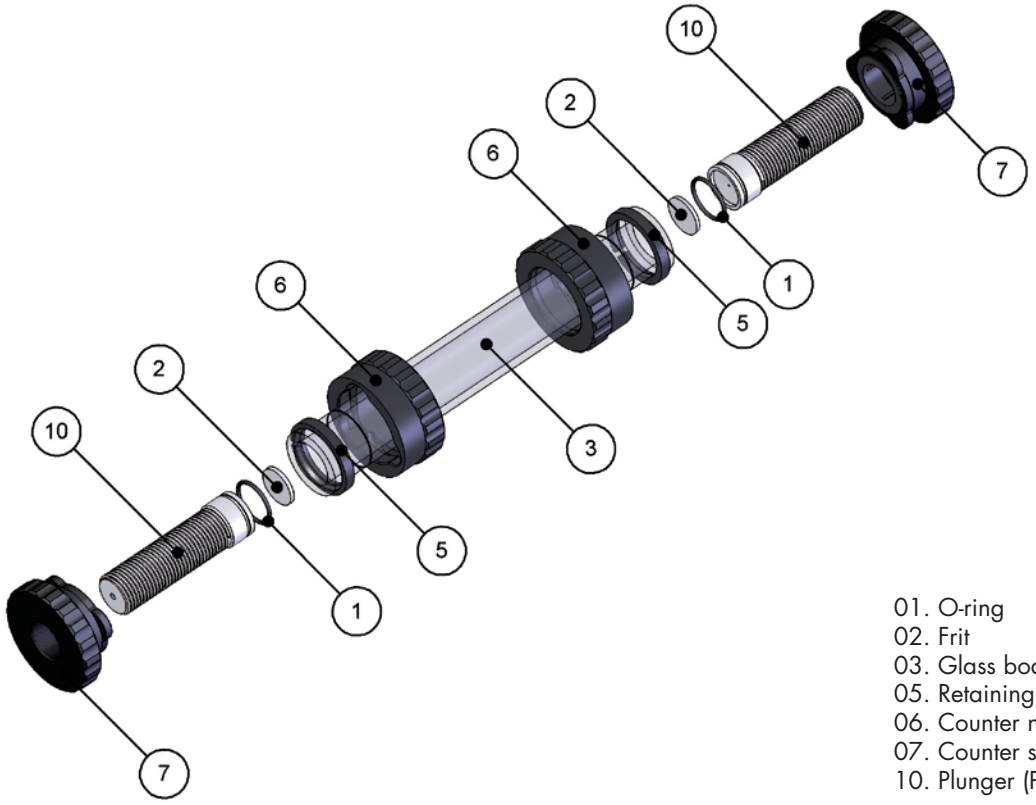

01. O-ring
02. Frit
03. Glass body
05. Retaining ring
06. Counter nut
07. Counter screw
10. Plunger (PE)

Econoline® SR-version

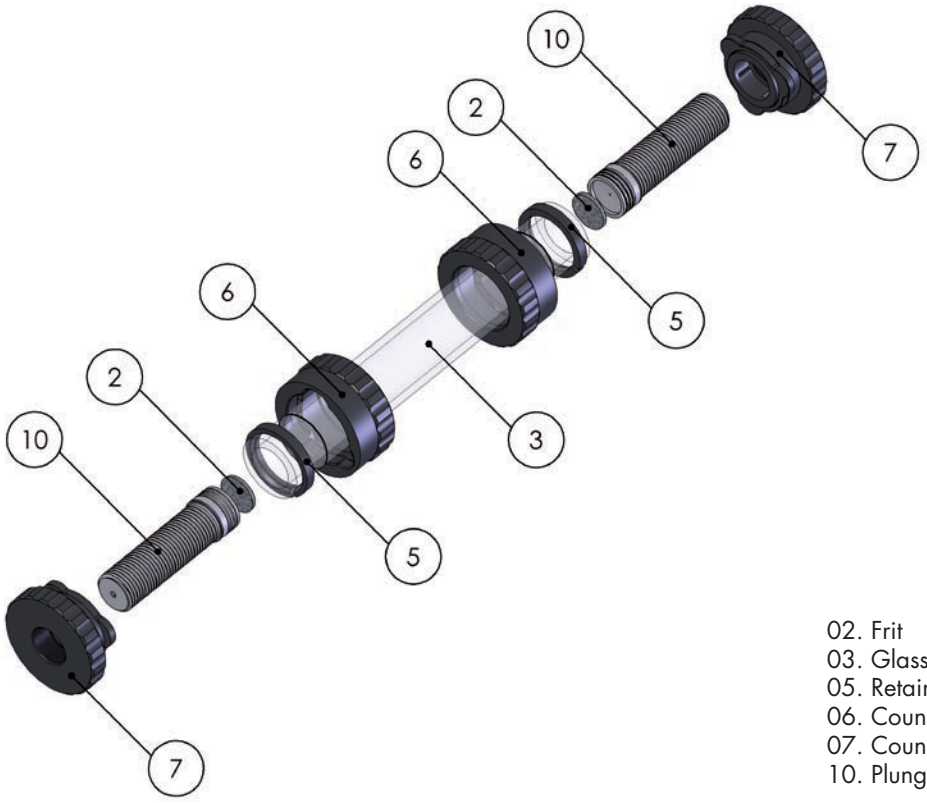

02. Frit
03. Glass body
05. Retaining ring
06. Counter nut
07. Counter screw
10. Plunger (PTFE)

Econoline® glass bodies

Part No.	ID [mm]	max. bed length [mm]
TAC05/125-2	5	125
TAC05/250-2	5	250
TAC05/500-2	5	500
TAC10/125-2	10	125
TAC10/250-2	10	250
TAC10/500-2	10	500
TAC15/125-2	15	125
TAC15/250-2	15	250
TAC15/500-2	15	500
TAC25/125-2	25	125
TAC25/250-2	25	250
TAC25/500-2	25	500
TAC35/125-2	35	125
TAC35/250-2	35	250
TAC35/500-2	35	500
TAC50/125-2	50	125
TAC50/250-2	50	250
TAC50/500-2	50	500

Econoline® column sealing O-ring, EPDM, for AB-version, pack of 2

Part No.	ID [mm]
TAC05/04E/P2	5
TAC10/04E/P2	10
TAC15/04E/P2	15
TAC25/04E/P2	25
TAC35/04E/P2	35
TAC50/04E/P2	50

Plungers, polyethylene, for AB-version (incl. O-ring, w/o frit)

Part No.	for column ID [mm]	adj. bed length [mm]
Short		
TAC05/03STS-AB-2	5	
TAC10/03STS-AB-2	10	
TAC15/03STS-AB-2	15	see
TAC25/03STS-AB-2	25	table page 3
TAC35/03STS-AB-2	35	
TAC50/03STS-AB-2	50	
Long		
TAC05/03STL-AB-2	5	
TAC10/03STL-AB-2	10	
TAC15/03STL-AB-2	15	see
TAC25/03STL-AB-2	25	table page 3
TAC35/03STL-AB-2	35	
TAC50/03STL-AB-2	50	

Plungers, PTFE, for SR-version (w/o frit)

Part No.	for column ID [mm]	adj. bed length [mm]
Short		
TAC05/03STS-3	5	
TAC10/03STS-3	10	
TAC15/03STS-3	15	see
TAC25/03STS-3	25	table page 3
TAC35/03STS-3	35	
TAC50/03STS-3	50	
Long		
TAC05/03STL-3	5	
TAC10/03STL-3	10	
TAC15/03STL-3	15	see
TAC25/03STL-3	25	table page 3
TAC35/03STL-3	35	
TAC50/03STL-3	50	

Frits, pack of 2

Part No.	for column ID [mm]	Porosity [µm]
Polyethylene		
TAC05PE10/P2	5	10
TAC05PE5/P2	5	5
TAC10PE10-2/P2	10	10
TAC10PE5-2/P2	10	5
TAC15PE10-2/P2	15	10
TAC15PE5-2/P2	15	5
TAC25PE10-2/P2	25	10
TAC25PE5-2/P2	25	5
TAC35PE10-2/P2	35	10
TAC35PE5-2/P2	35	5
TAC50PE10-2/P2	50	10
TAC50PE5-2/P2	50	5

Part No.	for column ID [mm]	Porosity [µm]
Sintered glass		
TAC05G10/P2	5	10
TAC05G2/P2	5	2
TAC10G10-2/P2	10	10
TAC10G2-2/P2	10	2
TAC15G10-2/P2	15	10
TAC15G2-2/P2	15	2
Stainless steel		
TAC25S10-2/P2	25	10
TAC25S2-2/P2	25	2
TAC35S10-2/P2	35	10
TAC35S2-2/P2	35	2
TAC50S10-2/P2	50	10
TAC50S2-2/P2	50	2

Additional spare parts

Part No.	Description
ELS-FRT	Frit removal tool
ELS-K.P316-5	Plug PTFE (1/4"-28G), pack of 5
ELS-K.P620-5	Female connector (both ends threaded 1/4"-28G), pack of 5
ELS-K.P621-5	Adaptor 1/4"-28G to M6, pack of 5
ELS-K.P627	Adaptor 10-32 to 1/4"-28G (incl. 1 F-300 fitting for 1/16" tubing)

Tubing

Part No.	Description
ELS-PT0.8FE1.6/M5	FEP tubing, 0.8 x 1.6 mm OD (1/16" OD), pack of 5 metres
ELS-PT1.6FE3.2/M5	FEP tubing, 1.6 x 3.2 mm OD (1/8" OD), pack of 5 metres
ELS-JR-T-082-M3	Tefzel tubing, 0.5 x 1.6 mm OD (1/16" OD), pack of 3 metres

Fittings (nuts and ferrules)

Part No.	Description [€]
ELS-JR-55050-10	Nut, 1/4"-28, PPS, for collapsible ferrule for 1/16" tubing, pack of 10
ELS-JR-CFL-CB1KF	Ferrule, collapsible, for 1/16" tubing, pack of 10
ELS-K.P201X	Nut 1/4"-28G for 1/16" tubing, pack of 10
ELS-K.P200NX	Flangeless ferrule for 1/16" tubing, pack of 10
ELS-K.P207X	M6 nut for 1/16" tubing, pack of 10
ELS-K.P200NX	Flangeless ferrule for 1/16" tubing, pack of 10
ELS-JR-55051-10	FNut, 1/4"-28, PPS, for collapsible ferrule for 1/8" tubing, pack of 10
ELS-JR-CFL-CB2KF-10	Ferrule, collapsible, for 1/8" tubing, pack of 10
ELS-K.P301X	Nut 1/4"-28G for 1/8" tubing, pack of 10
ELS-K.P300NX	Ferrule for 1/8" tubing, pack of 10
ELS-K.P307X	M6 nut, for 1/8" tubing, pack of 10
ELS-K.P300NX	Ferrule for 1/8" tubing, pack of 10

Part No.	Description
ELS-JR-58000-5	10-32 nut/ferrule (one-piece-fitting) for 1/16" tubing (pack of 5)

Additional spare parts are available at request.

essentialLife Solutions

EconolineLP® Columns

Low Pressure, Low Price

HIGHLIGHTS:

- Biocompatible
- Universal Application
- Height Adjustment Plunger at One End
- Ease of Use
- Jacketed Version Available

Advantages of EconolineLP® Columns

1 LINEAR MOTION OF PISTON

Due to true linear motion of piston there is no torsional load imposed on the packed bed assuring true linear compression.

2 TRUE FRITS

True frit without the use of sock design employed in less expensive columns assure even flow distribution across the bed.

3 ROBUST INLET AND OUTLET CONNECTIONS

Inlet and outlet connections are made at the exterior of the column, which provide a more reliable and visible connection.

4 FINE THREAD ADJUSTMENT

Columns are provided with fine thread adjustment of piston to allow for precise control of piston placement.

5 EASY OPEN ENDS

Design features our unique easily removable threaded end fittings making column disassembly effortless.

6 SEAL ADJUSTMENT

Easily adjustable O-ring seals.

7 PACKING ADAPTER

User-friendly packing adapters available.

Pressure Limits:
10 - 30 Bars

Connections:
ID 10mm - 25mm
Two (2) 1/4"-28 fittings for 1/16" capillaries

ID 32mm - 50 mm
Two (2) 1/4"-28 fittings for 1/8" capillaries

Height Adjustment:
Multi-variable plunger at one end, 120 mm adjustment. Double piston configuration available upon request.

Accessories:
User-friendly packing adapters

EconolineLP® Columns

MATERIALS OF CONSTRUCTION

- Tube:Borosilicate Glass
- Temperature Range: 4°- 40° C
- Plunger: POM (Delrin®)
- Seal: Viton O-ring
- Frit: Porous Glass

INCLUDED SPARE PARTS

I.D. 10-25mm:
- 2 pcs. Nut 1/16"
- 2 pcs. Ferrule 1/16"
- 0.5mm FEP-Tubing I.D. 0.8mm, O.D. 1.6mm
- 1 pc. frit removel tool

I.D. 32-50mm:
- 2 pcs. Nut 1/8"
- 2 pcs. Ferrule 1/8"
- 0.5mm FEP-Tubing I.D. 1.6mm, O.D. 3.2 mm
- 1 pc. frit removel tool

EconolineLP® Columns

EconolineLP® **Column** with piston removed.

ID (mm)	Bed Length min-max (mm)	Volume min-max (ml)	Pressure Limit (bar)	Frit Porosity (um)	ELS Part No
10	0-120	0-9.42	30	16-40	ECO10/120V3V
10	80-200	6.28-15.71	30	16-40	ECO10/200V3V
10	330-450	25.92-35.34	30	16-40	ECO10/450V3V
10	630-750	49.48-58.90	30	16-40	ECO10/750V3V
10	880-1000	69.11-78.54	30	16-40	ECO10/999V3V
10	0-120	0-9.42	30	40-100	ECO10/120V4V
10	80-200	6.28-15.71	30	40-100	ECO10/200V4V
10	330-450	25.92-35.34	30	40-100	ECO10/450V4V
10	630-750	49.48-58.90	30	40-100	ECO10/750V4V
10	880-1000	69.11-78.54	30	40-100	ECO10/999V4V
15	0-120	0-21.21	25	16-40	ECO15/120V3V
15	80-200	14.14-35.34	25	16-40	ECO15/200V3V
15	330-450	58.32-79.52	25	16-40	ECO15/450V3V
15	630-750	111.33-132.54	25	16-40	ECO15/750V3V
15	880-1000	155.51-176.71	25	16-40	ECO15/999V3V
15	0-120	0-21.21	25	40-100	ECO15/120V4V
15	80-200	14.14-35.34	25	40-100	ECO15/200V4V
15	330-450	58.32-79.52	25	40-100	ECO15/450V4V
15	630-750	111.33-132.54	25	40-100	ECO15/750V4V
15	880-1000	155.51-176.71	25	40-100	ECO15/999V4V
20	0-120	0-37.70	20	16-40	ECO20/120V3V
20	80-200	25.13-62.83	20	16-40	ECO20/200V3V
20	330-450	103.67-141.37	20	16-40	ECO20/450V3V
20	630-750	197.92-235.62	20	16-40	ECO20/750V3V
20	880-1000	276.46-314.16	20	16-40	ECO20/999V3V
20	0-120	0-37.70	20	40-100	ECO20/120V4V
20	80-200	25.13-62.83	20	40-100	ECO20/200V4V
20	330-450	103.67-141.37	20	40-100	ECO20/450V4V
20	630-750	197.92-235.62	20	40-100	ECO20/750V4V
20	880-1000	276.46-314.16	20	40-100	ECO20/999V4V

We now accept Major Credit Cards.

Glass Tempering **Jacket** / Double **Piston** Configuration

User-friendly
PACKING ADAPTER
Available

ID (mm)	Bed Length min-max (mm)	Volume min-max (ml)	Pressure Limit (bar)	Frit Porosity (um)	ELS Part No
25	0-120	0-58.90	15	16-40	ECO25/120M3V-K
25	0-200	0-98.17	15	16-40	ECO25/200M3V-K
25	210-450	103.08-220.89	15	16-40	ECO25/450M3V-K
25	510-750	250.35-368.16	15	16-40	ECO25/750M3V-K
25	760-1000	373.06-490.87	15	16-40	ECO25/999M3V-K
25	0-120	0-58.90	15	40-100	ECO25/120M4V-K
25	0-200	0-98.17	15	40-100	ECO25/200M4V-K
25	210-450	103.08-220.89	15	40-100	ECO25/450M4V-K
25	510-750	250.35-368.16	15	40-100	ECO25/750M4V-K
25	760-1000	373.06-490.87	15	40-100	ECO25/999M4V-K
32	0-120	0-96.51	10	16-40	ECO32/120M3V-K
32	0-200	0-160.85	10	16-40	ECO32/200M3V-K
32	210-450	168.89-361.91	10	16-40	ECO32/450M3V-K
32	510-750	410.17-603.19	10	16-40	ECO32/750M3V-K
32	760-1000	611.23-804.25	10	16-40	ECO32/999M3V-K
32	0-120	0-96.51	10	40-100	ECO32/120M4V-K
32	0-200	0-160.85	10	40-100	ECO32/200M4V-K
32	210-450	168.89-361.91	10	40-100	ECO32/450M4V-K
32	510-750	410.17-603.19	10	40-100	ECO32/750M4V-K
32	760-1000	611.23-804.25	10	40-100	ECO32/999M4V-K
50	0-120	0-235.62	10	16-40	ECO50/120M3V-K
50	0-200	0-392.70	10	16-40	ECO50/200M3V-K
50	210-450	412.33-883.57	10	16-40	ECO50/450M3V-K
50	510-750	1001.38-1472.62	10	16-40	ECO50/750M3V-K
50	760-1000	1492.26-1963.49	10	16-40	ECO50/999M3V-K
50	0-120	0-235.62	10	40-100	ECO50/120M4V-K
50	0-200	0-392.70	10	40-100	ECO50/200M4V-K
50	210-450	412.33-883.57	10	40-100	ECO50/450M4V-K
50	510-750	1001.38-1472.62	10	40-100	ECO50/750M4V-K
50	760-1000	1001.38-1472.62	10	40-100	ECO50/999M4V-K

Glass Tempering **Jacket** / Double **Piston** Configuration

Double Piston
Econoline**LP**® **Column** with
Glass Tempering Jacket.

ID (mm)	Bed Length min-max (mm)	Volume min-max (ml)	Pressure Limit (bar)	Frit Porosity (um)	ELS Part No
10	0-120	0-9.42	30	16-40	ECO10/120M3V-K
10	0-200	0-15.71	30	16-40	ECO10/200M3V-K
10	210-450	16.49-35.34	30	16-40	ECO10/450M3V-K
10	510-750	40.06-58.90	30	16-40	ECO10/750M3V-K
10	760-1000	59.69-78.54	30	16-40	ECO10/999M3V-K
10	0-120	0-9.42	30	40-100	ECO10/120M4V-K
10	0-200	0-15.71	30	40-100	ECO10/200M4V-K
10	210-450	16.49-35.34	30	40-100	ECO10/450M4V-K
10	510-750	40.06-58.90	30	40-100	ECO10/750M4V-K
10	760-1000	59.69-78.54	30	40-100	ECO10/999M4V-K
15	0-120	0-21.21	25	16-40	ECO15/120M3V-K
15	0-200	0-35.34	25	16-40	ECO15/200M3V-K
15	210-450	37.11-79.52	25	16-40	ECO15/450M3V-K
15	510-750	90.12-132.54	25	16-40	ECO15/750M3V-K
15	760-1000	144.30-176.71	25	16-40	ECO15/999M3V-K
15	0-120	0-21.21	25	40-100	ECO15/120M4V-K
15	0-200	0-35.34	25	40-100	ECO15/200M4V-K
15	210-450	37.11-79.52	25	40-100	ECO15/450M4V-K
15	510-750	90.12-132.54	25	40-100	ECO15/750M4V-K
15	760-1000	144.30-176.71	25	40-100	ECO15/999M4V-K
20	0-120	0-37.70	20	16-40	ECO20/120M3V-K
20	0-200	0-62.83	20	16-40	ECO20/200M3V-K
20	210-450	65.97-141.37	20	16-40	ECO20/450M3V-K
20	510-750	160.22-235.362	20	16-40	ECO20/750M3V-K
20	760-1000	238.76-314.16	20	16-40	ECO20/999M3V-K
20	0-120	0-37.70	20	40-100	ECO20/120M4V-K
20	0-200	0-62.83	20	40-100	ECO20/200M4V-K
20	210-450	65.97-141.37	20	40-100	ECO20/450M4V-K
20	510-750	160.22-235.362	20	40-100	ECO20/750M4V-K
20	760-1000	238.76-314.16	20	40-100	ECO20/999M4V-K

Econoline**LP®** **Column** with frit removal tool.

ID (mm)	Bed Length min-max (mm)	Volume min-max (ml)	Pressure Limit (bar)	Frit Porosity (um)	ELS Part No
25	0-120	0-58.90	15	16-40	ECO25/120V3V
25	80-200	39.27-98.17	15	16-40	ECO25/200V3V
25	330-450	161.99-220.89	15	16-40	ECO25/450V3V
25	630-750	309.25-368.16	15	16-40	ECO25/750V3V
25	880-1000	431.97-490.87	15	16-40	ECO25/999V3V
25	0-120	0-58.90	15	40-100	ECO25/120V4V
25	80-200	39.27-98.17	15	40-100	ECO25/200V4V
25	330-450	161.99-220.89	15	40-100	ECO25/450V4V
25	630-750	309.25-368.16	15	40-100	ECO25/750V4V
25	880-1000	431.97-490.87	15	40-100	ECO25/999V4V
32	0-120	0-96.51	10	16-40	ECO32/120V3V
32	80-200	64.34-160.85	10	16-40	ECO32/200V3V
32	330-450	265.40-361.91	10	16-40	ECO32/450V3V
32	630-750	506.68-603.19	10	16-40	ECO32/750V3V
32	880-1000	707.74-804.25	10	16-40	ECO32/999V3V
32	0-120	0-96.51	10	40-100	ECO32/120V4V
32	80-200	64.34-160.85	10	40-100	ECO32/200V4V
32	330-450	265.40-361.91	10	40-100	ECO32/450V4V
32	630-750	506.68-603.19	10	40-100	ECO32/750V4V
32	880-1000	707.74-804.25	10	40-100	ECO32/999V4V
50	0-120	0-235.62	10	16-40	ECO50/120V3V
50	80-200	157.08-392.70	10	16-40	ECO50/200V3V
50	330-450	647.95-883.57	10	16-40	ECO50/450V3V
50	630-750	1237.00-1472.62	10	16-40	ECO50/750V3V
50	880-1000	1727.87-1963.49	10	16-40	ECO50/999V3V
50	0-120	0-235.62	10	40-100	ECO50/120V4V
50	80-200	157.08-392.70	10	40-100	ECO50/200V4V
50	330-450	647.95-883.57	10	40-100	ECO50/450V4V
50	630-750	1237.00-1472.62	10	40-100	ECO50/750V4V
50	880-1000	1727.87-1963.49	10	40-100	ECO50/999V4V

essentialLife Solutions

IsoKrom™ **Columns**

Economical/Sanitary
Process Scale Technology

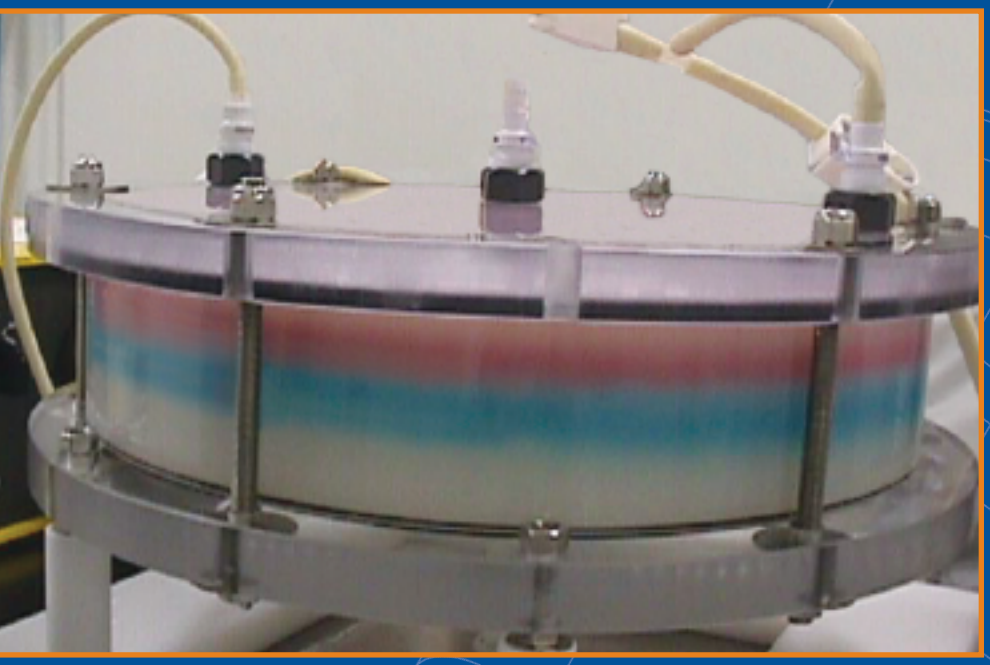

HIGHLIGHTS:

- All wetted parts are either autoclavable, disposable and/or can be completely taken apart for thorough cleaning.
- Fixed volume, packing through the wall.
- Reduced dead-space by volume (V) and length (L).
- Simple & Robust - IsoKrom™ is designed around standard industrial parts, which lowers the price and assures quality.
- No metal parts contact the solution.

IsoKrom™ Columns

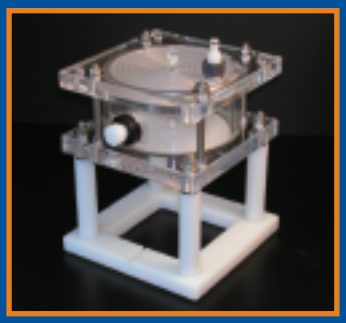

Acrylic columns for preparative low-medium pressure bio-chromatography available from ISO 9000 certified manufacturer

- Improved column sanitation with a packed bed in (CIP) as well as in a disassembled state.
- Inexpensive mesh replacement eliminates potential carry-over of sorbent and contaminants.
- No packing valves blocking the mesh, no stagnant pockets. Uniform unobstructed flow through the entire bed.
- Shorter dead-space translates into reduced clearance time ($=L^2$), and/or a more thorough CIP.
- Shortended time for column order delivery. Standard parts (Acrylic tube, Nylon mesh, etc.) are available on short notice.
- Due to lower column cost, each purification step can afford a separate dedicated column, with no need to clean and validate re-packing.
- No issues with rusting at low pH and/or at high Chloride, EDTA and Citrate concentration.

"In a multi-product environment, we install new mesh for each new product run to prevent carry-over contamination. In contrast to IsoKrom, frit replacement in other large columns is expensive, laborious and/or requires factory service".

J. Burton Lee, President,
Lee BioSolutions Inc., MO

"Processes have never been this robust with other systems...[IsoKrom] allows a much faster cycle time for a column run. Production personnel really appreciate when different operators, on different days and with different batches, can consistently reproduce the performance".

Fred Drewe, Ph.D, President,
Drewe Browning Strickler, TX

AVAILABLE STANDARD SIZES*

Tube ID (cm)	Volume (L) at 20-cm bed
9.5	1.4
13.3	2.8
22.9	8.2
33.0	17.1
47.0	34.7
66.0	68.5
79.0	98.0
102.9	166.2
177.8	496.6
238.8	895.5

*Custom sizes available upon request.

IsoKrom™ Columns

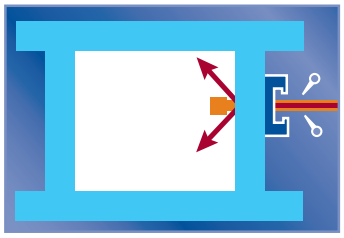

Pack sorbent slurry into precise fixed volume using sidepacking valve.

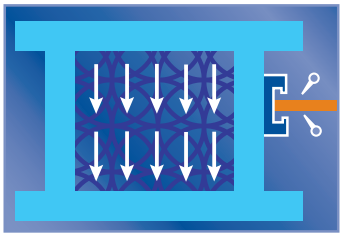

Packing valve is retracted flush with the wall eliminating dead volume in column.

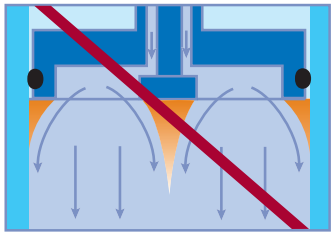

Other columns employ center packing valve which creates dead volume.

- All wetted parts are either autoclavable, replaceable and/or can be completely taken apart for thorough cleaning.
- No metal parts contact the solution: no issues with rusting at low pH and/or at high NaCl concentration.

essentialLife Solutions

2012 - Now Only Available to Custom Order - 10 sets (each Size) Minimum Order

Media-Flex® **Columns**

"Quick Change"
Cartridge Lab Columns

HIGHLIGHTS:

- Pressure to 86 bar
- Low Dead Volume Design
- Fully Visible Bed
- Autoclavable
- Reusable Glass Cartridge
- EPDM Seal for Cold Room Applications

Advantages of Media-Flex® Columns

1 HIGHER PRESSURE RATINGS INCORPORATING GLASS CONSTRUCTION

Pressures to 86 Bars (1,247 psig)
Full view of bed unlike stainless steel
Rugged construction for hard lab use

2 LINEAR MOTION OF PISTON

Due to true linear motion of piston there is no torsional load imposed on the packed bed assuring true linear compression.

3 TRUE FRITS

True frit without the use of sock design employed in less expensive columns assure even flow distribution across the bed.

4 ROBUST INLET AND OUTLET CONNECTIONS

Inlet and outlet connections are made at the exterior of the column, which provide a more reliable and visible connection.

5 FINE THREAD ADJUSTMENT

Columns are provided with fine thread adjustment of piston to allow for precise control of piston placement.

6 QUICK RELEASE ENDS

Design features our unique quick-disconnect end fittings making column disassembly and cartridge removal effortless.

7 UNIQUE CARTRIDGE DESIGN

Media-flex® offers the benefit in that the cartridge unit quickly releases from the housing without disturbing the bed or packing allowing for rapid, inexpensive change-out of the column.

Pressure Limits:
28 - 86 Bars

Connections:
Two 1/4" - 28 Fittings (one for 1/16" and one for 1/8" capillaries). The column is supplied with an M6 adapter to allow direct connection to any LC system.

Height Adjustment:
Multi-variable plunger, 6 cm/12 cm adjustment.

Accessories:
Packing adapters
Spare cartridges

MEDIA-FLEX® COLUMN MATERIALS OF CONSTRUCTION

SR (solvent resistant)

- Tube:Borosilicate Glass
- Temperature Range: 18°- 60° C
- Plunger: PTFE
- Seal: PTFE triple chevron
- Frit: ID 5 mm - 15 mm: sinter glass frit
  ID 25 mm - 50 mm: stainless steel

AB (aqueous buffer)

- Tube:Borosilicate Glass
- Temperature Range: 4°- 40° C
- Plunger: Polyethylene
- Seal: EPDM O-ring
- Frit: ID 5 mm - 50 mm: polyethylene

Media-Flex Lab® **Columns**

ID (mm)	Bed Length min-max (mm)	Volume min-max (ml)	Pressure Limit (bar)	Frit Porosity (um)	Frit Type	Column Type (application)	ELS Part No
5	0 - 120	0.00 - 2.36	86.67	10	Porous Glass	Solvent Resistant (SR)	MF-5-120-L-10-SR
5	60 - 120	1.18 - 2.36	86.67	10	Porous Glass	Solvent Resistant (SR)	MF-5-120-S-10-SR
5	140 - 260	2.75 - 5.11	86.67	10	Porous Glass	Solvent Resistant (SR)	MF-5-260-L-10-SR
5	200 - 260	3.93 - 5.11	86.67	10	Porous Glass	Solvent Resistant (SR)	MF-5-260-S-10-SR
5	380 - 500	7.46 - 9.82	86.67	10	Porous Glass	Solvent Resistant (SR)	MF-5-500-L-10-SR
5	440 - 500	8.64 - 9.82	86.67	10	Porous Glass	Solvent Resistant (SR)	MF-5-500-S-10-SR
5	0 - 120	0.00 - 2.36	86.67	2	Porous Glass	Solvent Resistant (SR)	MF-5-120-L-2-SR
5	60 - 120	1.18 - 2.36	86.67	2	Porous Glass	Solvent Resistant (SR)	MF-5-120-S-2-SR
5	140 - 260	2.75 - 5.11	86.67	2	Porous Glass	Solvent Resistant (SR)	MF-5-260-L-2-SR
5	200 - 260	3.93 - 5.11	86.67	2	Porous Glass	Solvent Resistant (SR)	MF-5-260-S-2-SR
5	380 - 500	7.46 - 9.82	86.67	2	Porous Glass	Solvent Resistant (SR)	MF-5-500-L-2-SR
5	440 - 500	8.64 - 9.82	86.67	2	Porous Glass	Solvent Resistant (SR)	MF-5-500-S-2-SR
10	0 - 120	0.00 - 9.42	80	10	Porous Glass	Solvent Resistant (SR)	MF-10-120-L-10-SR
10	60 - 120	4.71 - 9.42	80	10	Porous Glass	Solvent Resistant (SR)	MF-10-120-S-10-SR
10	140 - 260	11.00 - 20.42	80	10	Porous Glass	Solvent Resistant (SR)	MF-10-260-L-10-SR
10	200 - 260	15.71 - 20.42	80	10	Porous Glass	Solvent Resistant (SR)	MF-10-260-S-10-SR
10	380 - 500	29.85 - 39.27	80	10	Porous Glass	Solvent Resistant (SR)	MF-10-500-L-10-SR
10	440 - 500	34.56 - 39.27	80	10	Porous Glass	Solvent Resistant (SR)	MF-10-500-S-10-SR
10	0 - 120	0.00 - 9.42	80	2	Porous Glass	Solvent Resistant (SR)	MF-10-120-L-2-SR
10	60 - 120	4.71 - 9.42	80	2	Porous Glass	Solvent Resistant (SR)	MF-10-120-S-2-SR
10	140 - 260	11.00 - 20.42	80	2	Porous Glass	Solvent Resistant (SR)	MF-10-260-L-2-SR
10	200 - 260	15.71 - 20.42	80	2	Porous Glass	Solvent Resistant (SR)	MF-10-260-S-2-SR
10	380 - 500	29.85 - 39.27	80	2	Porous Glass	Solvent Resistant (SR)	MF-10-500-L-2-SR
10	440 - 500	34.56 - 39.27	80	2	Porous Glass	Solvent Resistant (SR)	MF-10-500-S-2-SR
15	0 - 120	0.00 - 21.21	66.67	10	Porous Glass	Solvent Resistant (SR)	MF-15-120-L-10-SR
15	60 - 120	10.60 - 21.21	66.67	10	Porous Glass	Solvent Resistant (SR)	MF-15-120-S-10-SR
15	140 - 260	24.74 - 45.95	66.67	10	Porous Glass	Solvent Resistant (SR)	MF-15-260-L-10-SR
15	200 - 260	35.34 - 45.95	66.67	10	Porous Glass	Solvent Resistant (SR)	MF-15-260-S-10-SR
15	380 - 500	67.15 - 88.36	66.67	10	Porous Glass	Solvent Resistant (SR)	MF-15-500-L-10-SR
15	440 - 500	77.75 - 88.36	66.67	10	Porous Glass	Solvent Resistant (SR)	MF-15-500-S-10-SR
15	0 - 120	0.00 - 21.21	66.67	2	Porous Glass	Solvent Resistant (SR)	MF-15-120-L-2-SR
15	60 - 120	10.60 - 21.21	66.67	2	Porous Glass	Solvent Resistant (SR)	MF-15-120-S-2-SR
15	140 - 260	24.74 - 45.95	66.67	2	Porous Glass	Solvent Resistant (SR)	MF-15-260-L-2-SR
15	200 - 260	35.34 - 45.95	66.67	2	Porous Glass	Solvent Resistant (SR)	MF-15-260-S-2-SR
15	380 - 500	67.15 - 88.36	66.67	2	Porous Glass	Solvent Resistant (SR)	MF-15-500-L-2-SR
15	440 - 500	77.75 - 88.36	66.67	2	Porous Glass	Solvent Resistant (SR)	MF-15-500-S-2-SR

ID (mm)	Bed Length min-max (mm)	Volume min-max (ml)	Pressure Limit (bar)	Frit Porosity (um)	Frit Type	Column Type (application)	ELS Part No
20	0 - 120	0.00 - 37.70	60	10	Stainless Steel	Solvent Resistant (SR)	MF-20-120-L-10-SR
20	60 - 120	18.85 - 37.70	60	10	Stainless Steel	Solvent Resistant (SR)	MF-20-120-S-10-SR
20	140 - 260	43.98 - 81.86	60	10	Stainless Steel	Solvent Resistant (SR)	MF-20-260-L-10-SR
20	200 - 260	62.83 -81.86	60	10	Stainless Steel	Solvent Resistant (SR)	MF-20-260-S-10-SR
20	380 - 500	119.38 - 157.08	60	10	Stainless Steel	Solvent Resistant (SR)	MF-20-500-L-10-SR
20	440 - 500	138.23 - 157.08	60	10	Stainless Steel	Solvent Resistant (SR)	MF-20-500-S-10-SR
20	0 - 120	0.00 - 37.70	60	2	Stainless Steel	Solvent Resistant (SR)	MF-20-120-L-2-SR
20	60 - 120	18.85 - 37.70	60	2	Stainless Steel	Solvent Resistant (SR)	MF-20-120-S-2-SR
20	140 - 260	43.98 - 81.86	60	2	Stainless Steel	Solvent Resistant (SR)	MF-20-260-L-2-SR
20	200 - 260	62.83 -81.86	60	2	Stainless Steel	Solvent Resistant (SR)	MF-20-260-S-2-SR
20	380 - 500	119.38 - 157.08	60	2	Stainless Steel	Solvent Resistant (SR)	MF-20-500-L-2-SR
20	440 - 500	138.23 - 157.08	60	2	Stainless Steel	Solvent Resistant (SR)	MF-20-500-S-2-SR
25	0 - 120	0.00 - 58.90	50	10	Stainless Steel	Solvent Resistant (SR)	MF-25-120-L-10-SR
25	60 - 120	29.45 - 58.90	50	10	Stainless Steel	Solvent Resistant (SR)	MF-25-120-S-10-SR
25	140 - 260	68.72 - 127.63	50	10	Stainless Steel	Solvent Resistant (SR)	MF-25-260-L-10-SR
25	200 - 260	98.17 - 127.63	50	10	Stainless Steel	Solvent Resistant (SR)	MF-25-260-S-10-SR
25	380 - 500	186.53 - 245.44	50	10	Stainless Steel	Solvent Resistant (SR)	MF-25-500-L-10-SR
25	440 - 500	215.98 - 245.44	50	10	Stainless Steel	Solvent Resistant (SR)	MF-25-500-S-10-SR
25	0 - 120	0.00 - 58.90	50	2	Stainless Steel	Solvent Resistant (SR)	MF-25-120-L-2-SR
25	60 - 120	29.45 - 58.90	50	2	Stainless Steel	Solvent Resistant (SR)	MF-25-120-S-2-SR
25	140 - 260	68.72 - 127.63	50	2	Stainless Steel	Solvent Resistant (SR)	MF-25-260-L-2-SR
25	200 - 260	98.17 - 127.63	50	2	Stainless Steel	Solvent Resistant (SR)	MF-25-260-S-2-SR
25	380 - 500	186.53 - 245.44	50	2	Stainless Steel	Solvent Resistant (SR)	MF-25-500-L-2-SR
25	440 - 500	215.98 - 245.44	50	2	Stainless Steel	Solvent Resistant (SR)	MF-25-500-S-2-SR
50	0 - 120	0.00 - 235.62	28	10	Stainless Steel	Solvent Resistant (SR)	MF-50-120-L-10-SR
50	60 - 120	117.81 - 235.62	28	10	Stainless Steel	Solvent Resistant (SR)	MF-50-120-S-10-SR
50	140 - 260	274.89 - 510.51	28	10	Stainless Steel	Solvent Resistant (SR)	MF-50-260-L-10-SR
50	200 - 260	392.70 - 510.51	28	10	Stainless Steel	Solvent Resistant (SR)	MF-50-260-S-10-SR
50	380 - 500	746.13 - 981.75	28	10	Stainless Steel	Solvent Resistant (SR)	MF-50-500-L-10-SR
50	440 - 500	863.94 - 981.75	28	10	Stainless Steel	Solvent Resistant (SR)	MF-50-500-S-10-SR
50	0 - 120	0.00 - 235.62	28	2	Stainless Steel	Solvent Resistant (SR)	MF-50-120-L-2-SR
50	60 - 120	117.81 - 235.62	28	2	Stainless Steel	Solvent Resistant (SR)	MF-50-120-S-2-SR
50	140 - 260	274.89 - 510.51	28	2	Stainless Steel	Solvent Resistant (SR)	MF-50-260-L-2-SR
50	200 - 260	392.70 - 510.51	28	2	Stainless Steel	Solvent Resistant (SR)	MF-50-260-S-2-SR
50	380 - 500	746.13 - 981.75	28	2	Stainless Steel	Solvent Resistant (SR)	MF-50-500-L-2-SR
50	440 - 500	863.94 - 981.75	28	2	Stainless Steel	Solvent Resistant (SR)	MF-50-500-S-2-SR

Media-Flex Lab® **Columns**

ID (mm)	Bed Length min-max (mm)	Volume min-max (ml)	Pressure Limit (bar)	Frit Porosity (um)	Frit Type	Column Type (application)	ELS Part No
5	0 - 120	0.00 - 2.36	86.67	10	Polyethylene	Aqueous Buffer (AB)	MF-5-120-L-10-AB
5	60 - 120	1.18 - 2.36	86.67	10	Polyethylene	Aqueous Buffer (AB)	MF-5-120-S-10-AB
5	140 - 260	2.75 - 5.11	86.67	10	Polyethylene	Aqueous Buffer (AB)	MF-5-260-L-10-AB
5	200 - 260	3.93 - 5.11	86.67	10	Polyethylene	Aqueous Buffer (AB)	MF-5-260-S-10-AB
5	380 - 500	7.46 - 9.82	86.67	10	Polyethylene	Aqueous Buffer (AB)	MF-5-500-L-10-AB
5	440 - 500	8.64 - 9.82	86.67	10	Polyethylene	Aqueous Buffer (AB)	MF-5-500-S-10-AB
5	0 - 120	0.00 - 2.36	86.67	5	Polyethylene	Aqueous Buffer (AB)	MF-5-120-L-5-AB
5	60 - 120	1.18 - 2.36	86.67	5	Polyethylene	Aqueous Buffer (AB)	MF-5-120-S-5-AB
5	140 - 260	2.75 - 5.11	86.67	5	Polyethylene	Aqueous Buffer (AB)	MF-5-260-L-5-AB
5	200 - 260	3.93 - 5.11	86.67	5	Polyethylene	Aqueous Buffer (AB)	MF-5-260-S-5-AB
5	380 - 500	7.46 - 9.82	86.67	5	Polyethylene	Aqueous Buffer (AB)	MF-5-500-L-5-AB
5	440 - 500	8.64 - 9.82	86.67	5	Polyethylene	Aqueous Buffer (AB)	MF-5-500-S-5-AB
10	0 - 120	0.00 - 9.42	80	10	Polyethylene	Aqueous Buffer (AB)	MF-10-120-L-10-AB
10	60 - 120	4.71 - 9.42	80	10	Polyethylene	Aqueous Buffer (AB)	MF-10-120-S-10-AB
10	140 - 260	11.00 - 20.42	80	10	Polyethylene	Aqueous Buffer (AB)	MF-10-260-L-10-AB
10	200 - 260	15.71 - 20.42	80	10	Polyethylene	Aqueous Buffer (AB)	MF-10-260-S-10-AB
10	380 - 500	29.85 - 39.27	80	10	Polyethylene	Aqueous Buffer (AB)	MF-10-500-L-10-AB
10	440 - 500	34.56 - 39.27	80	10	Polyethylene	Aqueous Buffer (AB)	MF-10-500-S-10-AB
10	0 - 120	0.00 - 9.42	80	5	Polyethylene	Aqueous Buffer (AB)	MF-10-120-L-5-AB
10	60 - 120	4.71 - 9.42	80	5	Polyethylene	Aqueous Buffer (AB)	MF-10-120-S-5-AB
10	140 - 260	11.00 - 20.42	80	5	Polyethylene	Aqueous Buffer (AB)	MF-10-260-L-5-AB
10	200 - 260	15.71 - 20.42	80	5	Polyethylene	Aqueous Buffer (AB)	MF-10-260-S-5-AB
10	380 - 500	29.85 - 39.27	80	5	Polyethylene	Aqueous Buffer (AB)	MF-10-500-L-5-AB
10	440 - 500	34.56 - 39.27	80	5	Polyethylene	Aqueous Buffer (AB)	MF-10-500-S-5-AB
15	0 - 120	0.00 - 21.21	66.67	10	Polyethylene	Aqueous Buffer (AB)	MF-15-120-L-10-AB
15	60 - 120	10.60 - 21.21	66.67	10	Polyethylene	Aqueous Buffer (AB)	MF-15-120-S-10-AB
15	140 - 260	24.74 - 45.95	66.67	10	Polyethylene	Aqueous Buffer (AB)	MF-15-260-L-10-AB
15	200 - 260	35.34 - 45.95	66.67	10	Polyethylene	Aqueous Buffer (AB)	MF-15-260-S-10-AB
15	380 - 500	67.15 - 88.36	66.67	10	Polyethylene	Aqueous Buffer (AB)	MF-15-500-L-10-AB
15	440 - 500	77.75 - 88.36	66.67	10	Polyethylene	Aqueous Buffer (AB)	MF-15-500-S-10-AB
15	0 - 120	0.00 - 21.21	66.67	5	Polyethylene	Aqueous Buffer (AB)	MF-15-120-L-5-AB
15	60 - 120	10.60 - 21.21	66.67	5	Polyethylene	Aqueous Buffer (AB)	MF-15-120-S-5-AB
15	140 - 260	24.74 - 45.95	66.67	5	Polyethylene	Aqueous Buffer (AB)	MF-15-260-L-5-AB
15	200 - 260	35.34 - 45.95	66.67	5	Polyethylene	Aqueous Buffer (AB)	MF-15-260-S-5-AB
15	380 - 500	67.15 - 88.36	66.67	5	Polyethylene	Aqueous Buffer (AB)	MF-15-500-L-5-AB
15	440 - 500	77.75 - 88.36	66.67	5	Polyethylene	Aqueous Buffer (AB)	MF-15-500-S-5-AB

ID (mm)	Bed Length min-max (mm)	Volume min-max (ml)	Pressure Limit (bar)	Frit Porosity (um)	Frit Type	Column Type (application)	ELS Part No
20	0 - 120	0.00 - 37.70	60	10	Polyethylene	Aqueous Buffer (AB)	MF-20-120-L-10-AB
20	60 - 120	18.85 - 37.70	60	10	Polyethylene	Aqueous Buffer (AB)	MF-20-120-S-10-AB
20	140 - 260	43.98 - 81.86	60	10	Polyethylene	Aqueous Buffer (AB)	MF-20-260-L-10-AB
20	200 - 260	62.83 -81.86	60	10	Polyethylene	Aqueous Buffer (AB)	MF-20-260-S-10-AB
20	380 - 500	119.38 - 157.08	60	10	Polyethylene	Aqueous Buffer (AB)	MF-20-500-L-10-AB
20	440 - 500	138.23 - 157.08	60	10	Polyethylene	Aqueous Buffer (AB)	MF-20-500-S-10-AB
20	0 - 120	0.00 - 37.70	60	5	Polyethylene	Aqueous Buffer (AB)	MF-20-120-L-5-AB
20	60 - 120	18.85 - 37.70	60	5	Polyethylene	Aqueous Buffer (AB)	MF-20-120-S-5-AB
20	140 - 260	43.98 - 81.86	60	5	Polyethylene	Aqueous Buffer (AB)	MF-20-260-L-5-AB
20	200 - 260	62.83 -81.86	60	5	Polyethylene	Aqueous Buffer (AB)	MF-20-260-S-5-AB
20	380 - 500	119.38 - 157.08	60	5	Polyethylene	Aqueous Buffer (AB)	MF-20-500-L-5-AB
20	440 - 500	138.23 - 157.08	60	5	Polyethylene	Aqueous Buffer (AB)	MF-20-500-S-5-AB
25	0 - 120	0.00 - 58.90	50	10	Polyethylene	Aqueous Buffer (AB)	MF-25-120-L-10-AB
25	60 - 120	29.45 - 58.90	50	10	Polyethylene	Aqueous Buffer (AB)	MF-25-120-S-10-AB
25	140 - 260	68.72 - 127.63	50	10	Polyethylene	Aqueous Buffer (AB)	MF-25-260-L-10-AB
25	200 - 260	98.17 - 127.63	50	10	Polyethylene	Aqueous Buffer (AB)	MF-25-260-S-10-AB
25	380 - 500	186.53 - 245.44	50	10	Polyethylene	Aqueous Buffer (AB)	MF-25-500-L-10-AB
25	440 - 500	215.98 - 245.44	50	10	Polyethylene	Aqueous Buffer (AB)	MF-25-500-S-10-AB
25	0 - 120	0.00 - 58.90	50	5	Polyethylene	Aqueous Buffer (AB)	MF-25-120-L-5-AB
25	60 - 120	29.45 - 58.90	50	5	Polyethylene	Aqueous Buffer (AB)	MF-25-120-S-5-AB
25	140 - 260	68.72 - 127.63	50	5	Polyethylene	Aqueous Buffer (AB)	MF-25-260-L-5-AB
25	200 - 260	98.17 - 127.63	50	5	Polyethylene	Aqueous Buffer (AB)	MF-25-260-S-5-AB
25	380 - 500	186.53 - 245.44	50	5	Polyethylene	Aqueous Buffer (AB)	MF-25-500-L-5-AB
25	440 - 500	215.98 - 245.44	50	5	Polyethylene	Aqueous Buffer (AB)	MF-25-500-S-5-AB
50	0 - 120	0.00 - 235.62	28	10	Polyethylene	Aqueous Buffer (AB)	MF-50-120-L-10-AB
50	60 - 120	117.81 - 235.62	28	10	Polyethylene	Aqueous Buffer (AB)	MF-50-120-S-10-AB
50	140 - 260	274.89 - 510.51	28	10	Polyethylene	Aqueous Buffer (AB)	MF-50-260-L-10-AB
50	200 - 260	392.70 - 510.51	28	10	Polyethylene	Aqueous Buffer (AB)	MF-50-260-S-10-AB
50	380 - 500	746.13 - 981.75	28	10	Polyethylene	Aqueous Buffer (AB)	MF-50-500-L-10-AB
50	440 - 500	863.94 - 981.75	28	10	Polyethylene	Aqueous Buffer (AB)	MF-50-500-S-10-AB
50	0 - 120	0.00 - 235.62	28	5	Polyethylene	Aqueous Buffer (AB)	MF-50-120-L-5-AB
50	60 - 120	117.81 - 235.62	28	5	Polyethylene	Aqueous Buffer (AB)	MF-50-120-S-5-AB
50	140 - 260	274.89 - 510.51	28	5	Polyethylene	Aqueous Buffer (AB)	MF-50-260-L-5-AB
50	200 - 260	392.70 - 510.51	28	5	Polyethylene	Aqueous Buffer (AB)	MF-50-260-S-5-AB
50	380 - 500	746.13 - 981.75	28	5	Polyethylene	Aqueous Buffer (AB)	MF-50-500-L-5-AB
50	440 - 500	863.94 - 981.75	28	5	Polyethylene	Aqueous Buffer (AB)	MF-50-500-S-5-AB

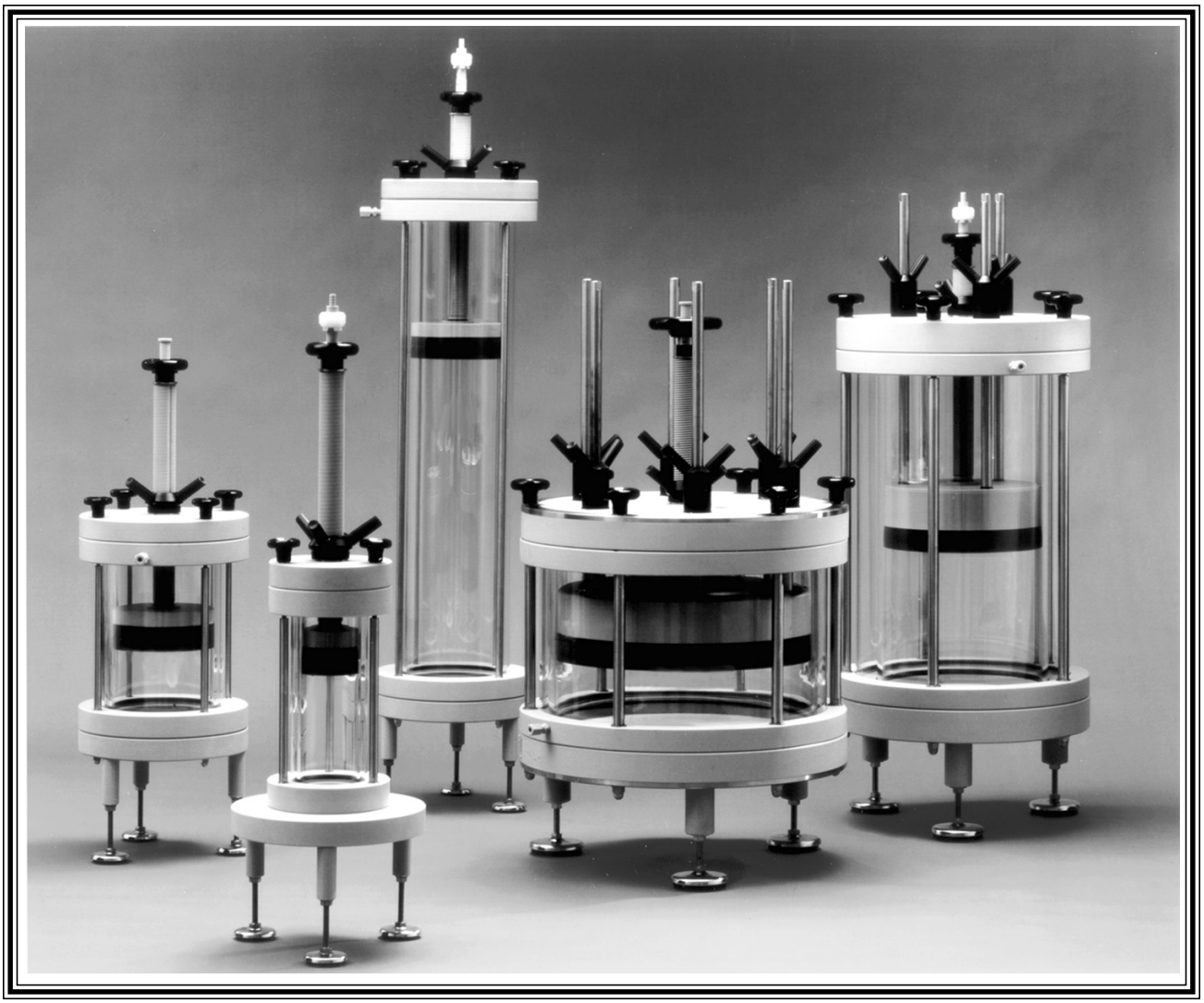

essentialLife Solutions

Upscale® Column Manual

Revision 2.0

1415 Hyde Park Avenue
Boston, MA 02136-2699 USA
(617) 326-0444 phone, (617) 326-0443 fax

CONTENTS:

I - INTRODUCTION

I.1 - Removing column from packaging and initial inspection

II - GENERAL DESCRIPTION

II.1 - Column
II.2 - Tube sub-assembly
II.3 - Base sub-assembly
II.4 - Piston sub-assembly
II.5 - Flow distributor
II.6 - Connectors and tubing

III - METHOD OF USE

III.1 - Piston and base assembly / frit replacement
III.2 - Packing
III.3 - Cleaning in place

IV - MAINTENANCE

V - WARRANTY

APPENDICES

1 - Operating specifications
2 - Materials of construction
3 - Chemical resistance
4 - System configurations – example
5 - Evaluation of the packed column efficiency
6 - Example of a sterilization / depyrogenation method
7 - Schematics – parts list
8 - Spare parts and Accessories
9 - Packaging content

Essential Life Solutions Ltd.

Manual For Medium-Pressure Chromatography Columns

Media-Flex ®

Revision 2.0
Date: 1/1/02

A. INTRODUCTION:

Essential Life Solutions Ltd Media-Flex® columns are suited for semi-preparative and preparative pressure chromatography. Available with 6 diameters (5, 10, 15, 20, 25, and 50 mm) and 3 maximum bed lengths (120, 260, 500 mm). The pressure stability depends on the column diameter (5mm: 90 bar/1300 psi; 10 mm: 80 bar/ 1160 psi; 15 mm: 70 bar/1016 psi; 15mm: 70/ 1016 psi; 20 mm: 60 bar/870 psi; 25 mm: 50 bar/ 725 psi; 50 mm: 25 bar/ 362 psi). The height-adjustable end piston allows variation of the bed length for 60 or 120 mm, respectively. A dead volume at the column inlet can be eliminated without opening the column.

B. EXTENT OF SUPPLY AND SPECIFICATION:

Number	Name	Material
1	column body	glass
1	piston, variable	PTFE o. HDPE (AB)
1	piston, fixed	PTFE o. HDPE (AB)
2	frits (pressed in)	glass/PE/stainless steel
1	divisible column	Delrin/alu
1	protective covering	alu, elox
1	fixed column lock	Delrin
1	frit ejector	Delrin/steel
2	fixing screws	Delrin
2	locking rings	Tefzel
2	connecting tubings	FEP/Tefzel

C. RECOMMENDED ACCESSORIES:

Number	Name	Material	Part No.
1 pck./ 5 pcs.	stoppers	PTFE	32968
1 pck./ 6 pcs.	coupling units	POM/ Delrin	32960
1 pck./ 6 pcs.	fixing screws	1/16” Delrin	928652
1 pck.	retaining rings	1/16” Tefzel	928654

D. CONTENT:

DETAILED DIAGRAM OF THE MEDIA-FLEX® COLUMN Page 03
1. DISMOUNTING AND MOUNTING OF THE PISTONS Page 04
2. FRIT REPLACEMENT Page 04
3. MOUNTING OF ESSENTIAL LIFE MPLC FITTINGS Page 04
4. ELIMINATION OF DEAD VOLUME Page 05
5. OPERATION OF THE COLUMN Page 05
6. CHEMICAL RESISTANCE Page 06
7. PACKING TECHNIQUES Page 07

Revision 2.0
1/1/02

8. CLEANING INSTRUCTIONS FOR PACKED COLUMNS Page 09
9. TROUBLESHOOTING Page 12

The current general conditions and the Essential Life Solutions Ltd warranty conditions are valid. All information in our manual leaflet is without obligation insofar as it is subject to technical changes serving product improvement.

Media-Flex® Column

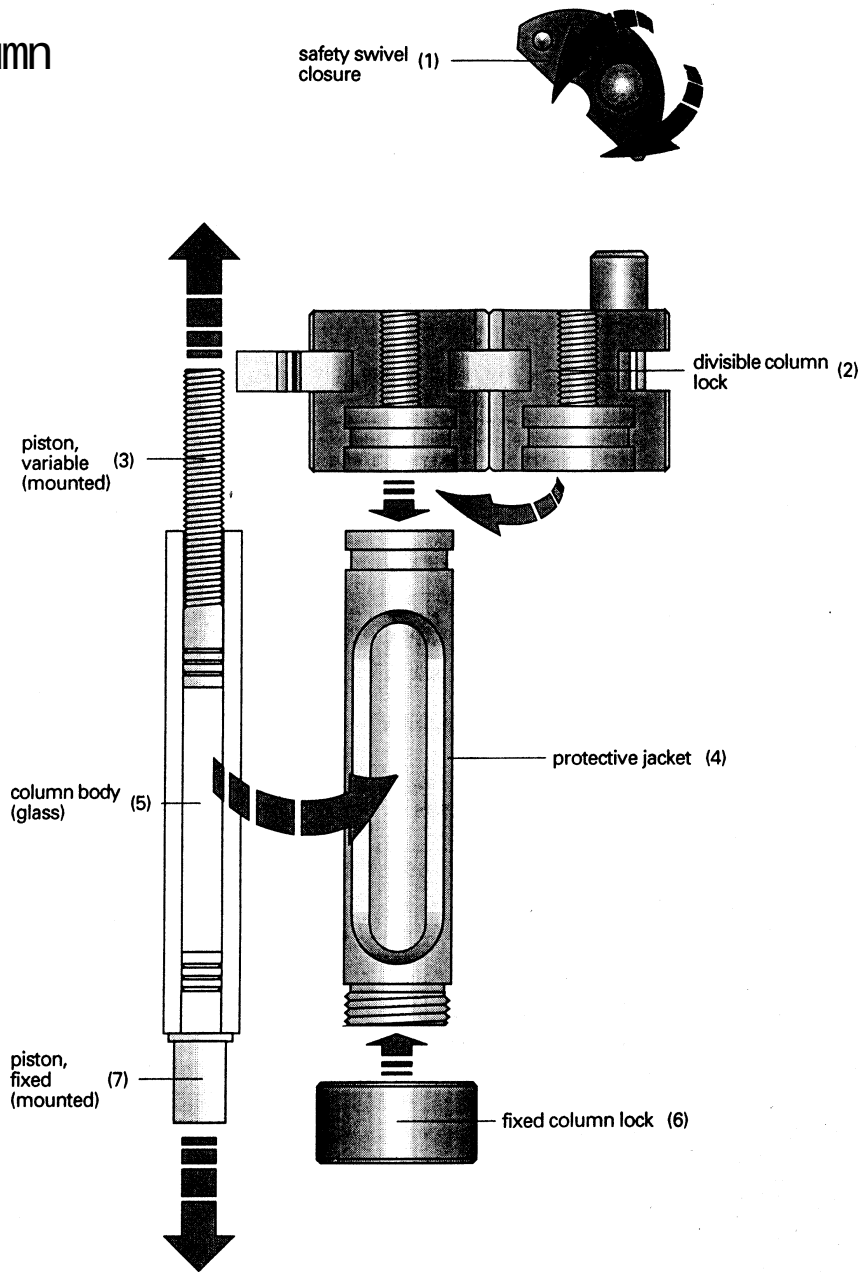

Revision 2.0
1/1/02

1. DISMOUNTING/ MOUNTING OF THE PISTON:

1.1 Dismounting:
1.2 Unlock safety turn-lock fastener by turning clockwise.
1.3 Swing open the divisible column lock at the sealing joint.
1.4 Remove cartridge from protective jacket by pressing fixed piston.

⚠ ***CAUTION! - dismounting of the end nut is not necessary.***

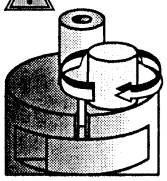
1.1

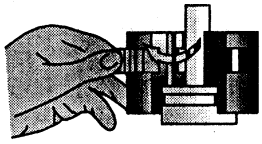
1.2

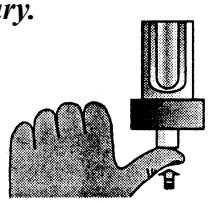
1.3

1.5 Mounting
1.6 Insert cartridge into protective jacket to stopper.

⚠ ***CAUTION! - Pay attention to safety turn-lock fastener when cartridge is inserted! Position the piston square correspondingly.***

1.7 Close divisible column lock.
1.8 Lock safely turn-lock fastener by turning it clockwise.

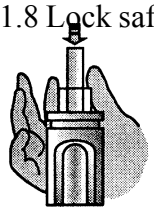
2.1

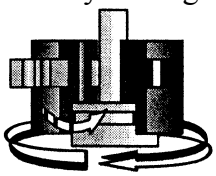
2.2

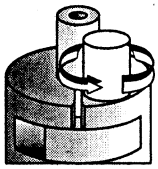
2.3

2. FRIT REPLACEMENT:

2.1 Eject old frit with supplied frit ejector.
2.2 Insertion of new frit: The teflon® receptacle of the piston is protected when it is heated before the new frit is pressed in (max. 121º C).

3. MOUNTING OF MPLC-FITTINGS:

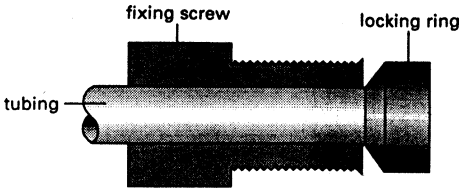

These mounting instructions are for tubing with 1.6 and 3.2 mm outer diameter.
Revision 2.0
1/1/02

3.1 The end of the tubing is vertically cut with a knife or a tubing cutting device.

⚠ ***CAUTION! - Do not cut with scissors to prevent squeezing. It is essential to cut the tubing vertically, as the cut edge is part of the sealing area!***

3.2 The fixing screw is drawn over the tubing.
3.3 .3 The locking rings is drawn over the tubing with the conical side against the banjo bolt. If it is not possible to mount the locking ring, the conical end is widened carefully with a suitable arbor (e.g. a scribing iron).
3.4 Now the fitting can be inserted in the wanted position. The seal is pressed onwards, while the screws are fastened until pressure is felt; then they are fastened for another ½ turn.

⚠ ***CAUTION!: - When the fittings are screwed into the teflon® thread it should be taken care that the fittings are screwed down straightly and are fastened carefully to prevent damage to the teflon® thread.***

4.0 ELIMINATION OF DEAD VOLUME:

A dead volume which might occur at the column inlet can be remedied simply without the need to open the column:
4.1 Turn off pump.
4.2Turn the divisible column lock counterclockwise.

⚠ ***CAUTION: - The piston should touch only the surface of the stationary phase. If it is pressed into the stationary phase, the packing may be destroyed.***

5.0 OPERATION OF THE COLUMN:

Putting into operation

Pistons (3 and 7), frits and column body (5) must be cleaned carefully before first use and before each new packing. In some cases it might be useful to dismount the column and wash these parts in a sonic bath for several minutes. After cleaning all parts must be rinsed with bio-distillated water and mounted as described under chapter 1, part 2. All parts must be free of dust and particles!
Be sure that the pistons (3 and 7) are inserted carefully into the column body (5): If not introduced absolutely axial, the piston seals might be damaged.
For operating the column it is connected to an appropriate chromatography system or pump. Chose tubing and tubing diameter according to the solvents and flow rates to be applied to the column. The preferred flow direction of the column should be from variable piston to fixed piston.

If the column bed shrinks a dead volume can easily be removed by moving down the variable piston (see page 4, chapter 1).

⚠CAUTION! - Only use degassed and pre filtered solvents for operating the column. Particles may clog the frits or damage the column packing! Make sure that the particle size of the chosen chromatography packing correlates to the frit porosity of the column!

Hints for operation:

5.1 Storage of the packed column: Open the sealing stoppers for one turn allowing the compensation of temperature-dependent pressure changes.

⚠CAUTION! - Protect moistened column against intensive heat and direct insulation. The heat induces the evaporation of high-volatile solvents, and the resulting pressure can crack the column.

5.2 We recommend to operate the column from the bottom (variable end piece) to the top (fixed end piece). The resulting benefit is that air escapes faster from the column so that it is conditioned faster (i.e. with less solvent).
5.3 We recommend to make sure before sample application that no dead volume originated at the column inlet during the conditioning phase (elimination of dead volume see page 6, chapter 4).

6.0 SOLVENT RESISTANCE:

Packed columns can be stored either in 20/80 ethanol/water, containing up to 1 M NaCl and neutral buffer or in neutral buffer containing 0,03% sodiumazide. NP and RP columns may be stored in organic solvents as needed for common use. All solvents should be filtered through a 0.45 um filter membrane.

In general the following solvents and additives can be used in normal operation. However we do not recommend to use any of them for longer periods of time or for storage. For information please refer to Essential Life Solutions Ltd.

*** Resistant to all common solvents as ethanol, methanol propanol, isopropanol, acetonitrile**
Note: Version AB is not resistant to all kinds of organic solvents
***Resistant to all common aqueous buffers**
*** Salts in aqueous solution as NaCl, (NH4)2 SO4, MgCl2, CaCl 2, etc.**
*** pH 1-14**
*** 2 M NaOH**
*** 1 M HCl**
Revision 2.0
1/1/02

*** 75% (v/v) Acetic acid**
*** Detergents (*2% w/v) as SDS, Trition, etc.**
*** 6 M Guanidinium-HCl, 8 M Urea**

*** Working temperature range:**
with PTFE piston and lamella seals: 16 – 40 ºC (Media-Flex®)
with HDPE piston and o-ring seals: 4 – 40 ºC (Media-Flex AB®)

7.0 PACKING TECHNIQUES:

These instructions are recommendations. In most cases good results are obtained referring to reproducibility and performance. Nevertheless these methods can be optimized for specific media and needs. Please also always refer to the packing recommendations of the related chromatography-media supplier.

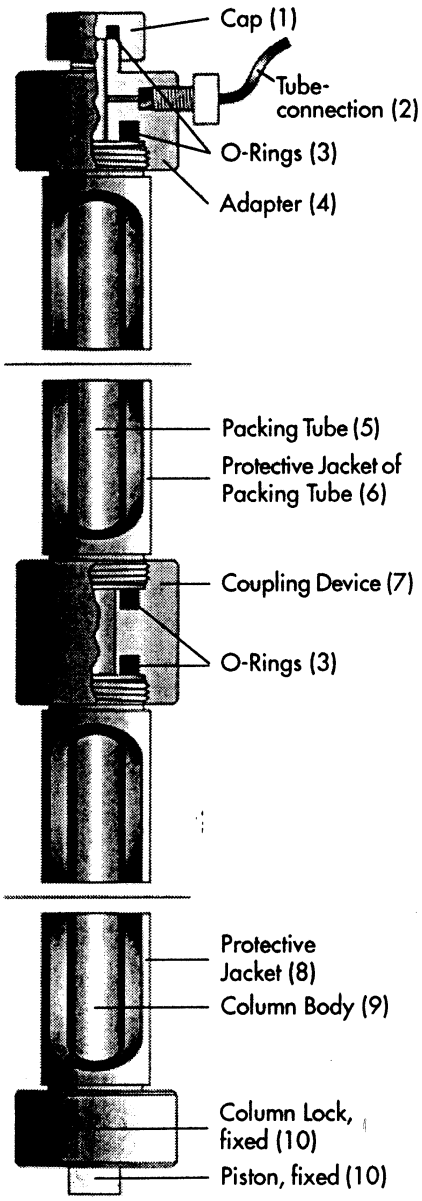

Revision 2.0
1/1/02

Mounting the packing device:
Mount column body with fixed piston and protective jacked as described in chapter 1. Insert the packing tube into the appropriate protective jacket and unscrew the adaptor onto the protective jacket of the packing tube. Connect both assembly units with the coupling device and tighten firmly. Insert the tube-connection into the adapter.
Fill in the slurry through the adaptor. Take care that the whole packing device is filled and free of air bubbles. Then close the packing device with the cap and secure that column lock, cap, adaptor, tubeconnection, and coupling device are tightened firmly.

⚠ ***CAUTION! - Make sure that no particles remain between o-rings of coupling device, adapter, cap, packing tube and column body. All o-rings must be in correct position.***

7.1 Preparing the slurry
Slurry the required amount of media with a suitable solvent (see instructions of media) to reach the volume of the packing device assembly. The slurry has to be shaken gently to get a homogenous solution (never use a magnetic stirrer for mixing the slurry). De-gas the slurry right before use.
7.2 Precautions:
Always use related safety equipment when packing glass columns under high pressure.
Never use compressed air or gas for packing glass columns. The pressure limits of columns and equipment have to be kept absolutely. Be aware of wearing correct laboratory clothing and safety glasses.

⚠ ***CAUTION ! - A glass column should always be used without gas pressure. Even a small tension in the glass body is sufficient to cause explosion of the glass body, resulting in liberation of the expansion energy of the gas causing the glass pieces to act like projectiles. If the glass body shatters under liquid pressure there is no danger as liquids are only little compressible thus having practically no expansion energy.***

7.4 Packing the column:
Making sure that all steps during packing of the column are carried out as quick as possible! Fill a few ml solvent (see instructions of media) into the column tube, so that the bottom frit is covered with liquid. Be sure there are no air bubbles. The slurry container has to be filled up completely without any air remaining. If needed fill up the packing device with solvent. Adjust the pump flow to the pressure limit of the column or pump with the maximum flow rate of the pump (never exceed the column pressure limit!). Keep pumping at least until the column pressure stays constant.

8.0 PACKING TECHNIQUES:

After the packing is finished, the packing device is disconnected from the pump and the upper tube (slurry container) is screwed off from the column tube. Make sure the residual system pressure is relaxed by opening the fitting at the column outlet. Be careful when installing the adjustable piston: There shall not be any particles between piston sealing and glass tube. Remove the column tube from the packing assembly and thoroughly place it into the column holder. The cartridge is then locked with the upper devisable screw lock. Reconnect the column to the pump and start pumping with a low flow rate. Increase the pump flow slowly until the pressure limit of the column is reached. Due to the high flow rate small dead volume between upper piston and gel bed may occur. Remove this dead volume by screwing down the adjustable piston: Make sure the pump is switched off and slowly turn the devisabe screw counter clockwise until the dead volume is diminished.
The column can now be equilibrated to the required chromatographic conditions and is ready for use.

Checking the column performance:

We strongly recommend to test the column performance with a suitable test substance to obtain HETP and peak symmetry. By repeating this test regularly the deteriorations of the column packing can easily be determined.

Number of theoretical plates:

N=5,54* (T 1/ W1/2)	T 1: Retention time (min) W ½: Peak width (min) at halve peak height
HETP=L/N	L: Column length in m

Peak symmetry:

S=W ½,re/W ½ li	W1/2, re: Peak width, right of peak median W ½, li: Peak width, left of peak median

9.0 CLEANING INSTRUCTIONS FOR PACKED COLUMN (CIP):

A cleaning procedure includes the three following, steps: regeneration of the chromatographic support, sterilization and depyrogenation.
Regeneration eliminates mineral and organic contaminants, which are non-specifically fixed on the chromatographic resin. These molecules are most often lipid substances (including pyrogens), protein aggregates, pigments, polyphenols or metal complexes. These substances decrease the performance of the packing material (capacity, resolution, purity and yield).

These problems may be overcome by using a regeneration solution (table II) which should be selected according to the nature of the contaminant and the chemical resistance of the packing material.
Sterilization involves the removal of micro-organisms by an appropriate chemical treatment. Sodium hydroxide is commonly used for the sterilization of chromatographic supports. Ethanol based solutions containing acetic acid or sodium hydroxide are also efficient (see technical appendices).
Depyrogenation eliminates endotoxins fixed on the chromatographic support. According to the solution used, this operation may be performed at the same time as sterilization, or in a following step.

Maintaining a column sterile requires a number of precautions:
After disassembling the column to its sub-assembly components: column tube unit, piston and base, wash each part with a sanitizing solution (diluted sodium hypochloride, ** 0.5 N NaOH). Frits must be immersed in this solution before for 30 to 60 min.
Rinse extensively with an apyrogenic sterile solution before re-assembling the column.
Column should be packed (see section II) following clean room precautions, especially concerning the working environment, which should be clean. Solutions pumped into the column must be sterilized and checked for pyrogens.
The chromatographic support will be decontaminated. It is advisable to include 0.2 um filters in-line at column inlet and outlet.

10.0 CLEANING INSTRUCTIONS FOR PACKED COLUMNS (CIP):

Cleaning procedures according to the nature of the absorbed material to be eliminated. Please refer also to the instructions for use of the related column packing!

10.0 CLEANING

Treatment	Contamination	Sterili-zation	Depyroge-nation
1-2 M sodium chloride	Highly charged molecules	Ineffective	Ineffective
Buffers pH 3-5	Highly charged molecules	Ineffective	Ineffective
Pronase treatment, neutral pH, calcium ions	Hydroiysis of adsorbed proteins	Ineffective	Ineffective
Pepsin treatments pH 1.5-2	Hydroiysis of adsorbed proteins	Ineffective	Ineffective
Non ionic detergents (e.g. Triton X-100, Tween 80)	Removal of hydrophobic proteins and lipidic substances	Ineffective	Ineffective
Cationic detergents pH 9-11	Removal of hydrophobic proteins and lipidic substances	Ineffective	Possible
Non ionic detergents pH 3 (acetic acid)	Removal of hydrophobic proteins and lipidic substances	Ineffective	Possible
Urea 6-8 M	Removal of protein aggregates	Ineffective	Unknown
1-100 mM EDTA in neutral or slightly acidic solution	Removal of metal complexes	Ineffective	Ineffective
2-3 M sodium chloride + 0.1-1 M hydrochloric acid	Removal of various small charged molecules and pigments	Ineffective	Effective
0.1-1 M sodium hydroxide	Removal of bound hydrophobic proteins, lipopoly-saccharides and other unknown contaminants	Effective	Effective
60% ethanol, 0,5-1 M acetic acid	Elimination of lipids, pigments, lipopoly-saccharides and other lipophilic substances	Very effective	Effective
50-80% acetic add	Solubilization and elimination of precipitated proteins	Unknown	Unknown
40-60% ethanol	Removal of certain proteins and lipid-like substances	Unknown	Unknown
Isopropanol gradient up to 100%	Removal of non polar lipids	Ineffective	Unknown
0.1-1 M mineral or organic acids	Elimination of various charged molecules and hydrolysis of some bound substances	Unknown	Unknown
0.1 M - 1 M HCl in 60% ethanol	Elimination of various charged molecules and lipids	Unknown	Effective

11.0 TROUBLESHOOTING

Problem	Cause	Remedy
1. Peak shape of eluted compounds deteriorates	1. Dead volume at column inlet	1. see page 6, chapter 4.: elimination of dead volume
	2. Inlet frit partially obscured	2. Remove and dismount piston, replace frit, mount and insert piston again. Then recondition column.
	3. Outlet frit partially obscured	3. Remove and dismount fixed piston, replace frit, mount and insert piston again. Then recondition column.
	4. Separation efficiency of stationary phase changed due to contamination	4. Repack column
	5. Stationary phase mechanically destroyed	5. Repack column
2. „Air" in the column	Gas evolution or solvent evaporation during storage	Recondition column
3. Abnormal pressure increase during operation	1. Incorrect valve position	1. Check valve position
	2. Obscured frit	2. see remedy, page 5, 1. 2.
	3. Fittings tightened too strong	3. Replace fittings and ferrules, cut obscured tube.
4. Pressure drop during operation	1. Line or fitting between pump and column leaks	1. Check lines and connections
	2. Solvent supply empty	2. Refill solvent
5. Solvents leaks from column	See diagram on following page	See diagram on following page

11.0 TROUBLESHOOTING

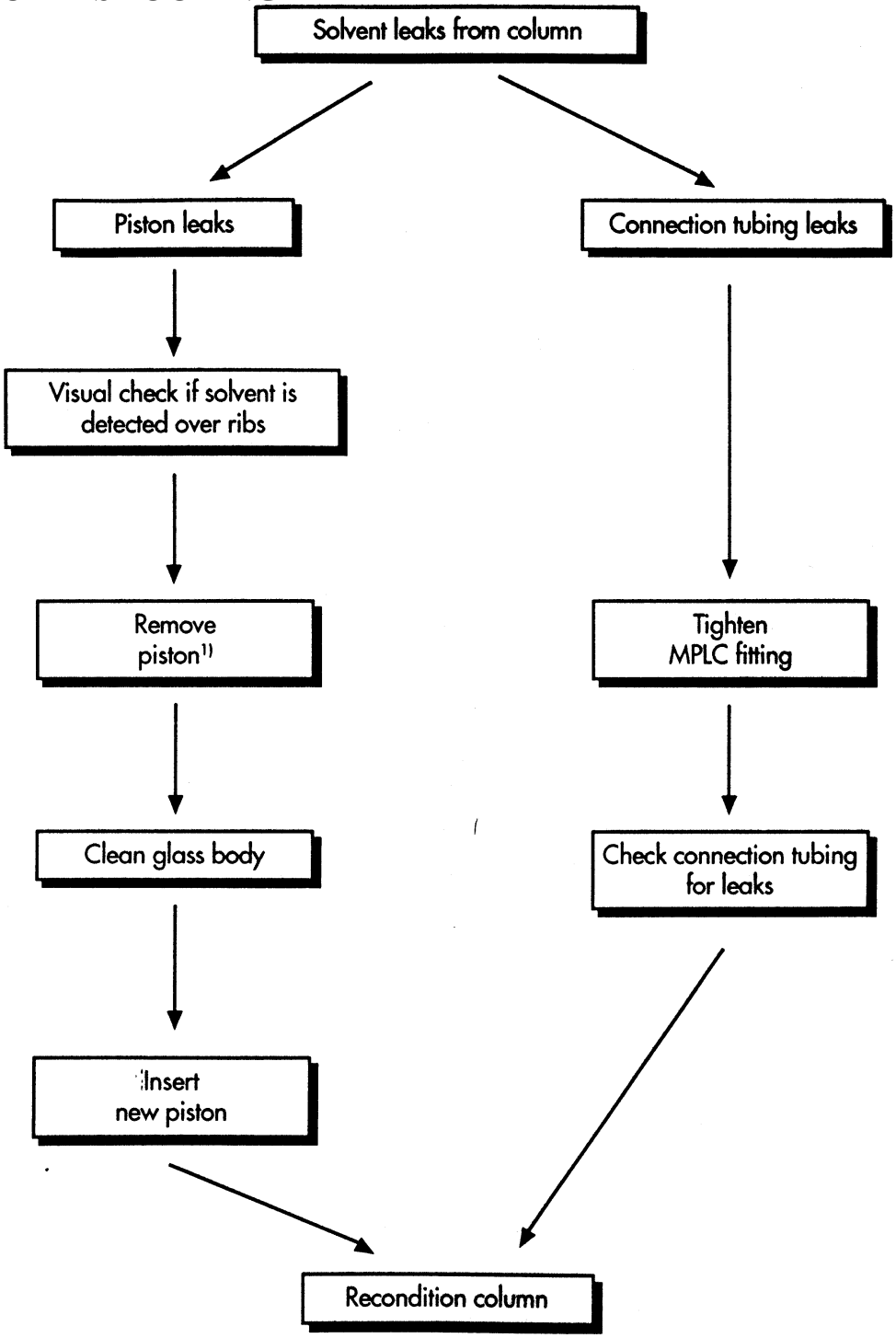

CAUTION: Open connection tubing first to prevent cracking of the packing due to vacuum originated by removal of the piston.

Revision 2.0
1/1/02

1415 Hyde Park Avenue
Boston, MA 02136-2699 USA
(617) 326-0444 phone, (617) 326-0443 fax

I - INTRODUCTION

Essentail Life Solutions Upscale® glass columns are designed to meet the requirements for large scale purification of biological molecules using low pressure liquid chromatography techniques.

Upscale® columns consist of a borosilicate glass tube protected by an acrylic jacket, a base plate and an adjustable piston. The piston range allows the user to select a variety of column heights and volumes.

The base plate and the piston are equipped with a flow distributor system, composed of an anti-jetting device and radial distribution channels equipped with a 20 um (standard) frit.

Upscale® columns feature an efficient flow distribution system which ensures uniform flow of liquid onto the surface of the packing material and out of the column.

The sealing systems at the lower and upper portion of the column have been designed to minimize dead volume which may trap micro-organisms, retain contaminating substances and/or dilute the sample. All connections have a sanitary design.

The column is easily packed with few simple adjustments.

This piston range is set and pressure is applied on the upper seal by simply operating two handles, which reduces the time required for set-up of the column.

Upscale® columns are composed of biocompatible materials and withstand solutions commonly used in low pressure liquid chromatography (acidic and basic solutions, detergents, polar organic solvents).

I.1 – Removing the column from packaging – Initial inspection

Upon receipt of the column, check that all parts are included (see detail of packaging content in appendix 9) and that there has not been damage to the column during shipment.

Columns are shipped with piston seal compressed and on 300 and 450 mm dia. Columns, pressure rod handles are clamped. Unclamp pressure rod handles and decompress piston seal by turning handles fully counter clockwise, then adjust piston height to remove from package (see figure 1).

1415 Hyde Park Avenue
Boston, MA 02136-2699 USA
(617) 326-0444 phone, (617) 326-0443 fax

II - GENERAL DESCRIPTION

II.1 - THE COLUMN (figure 1)

The design and the materials of construction are similar for all column diameters and heights.

The geometric features of Upscale® glass columns are summarized in table I.

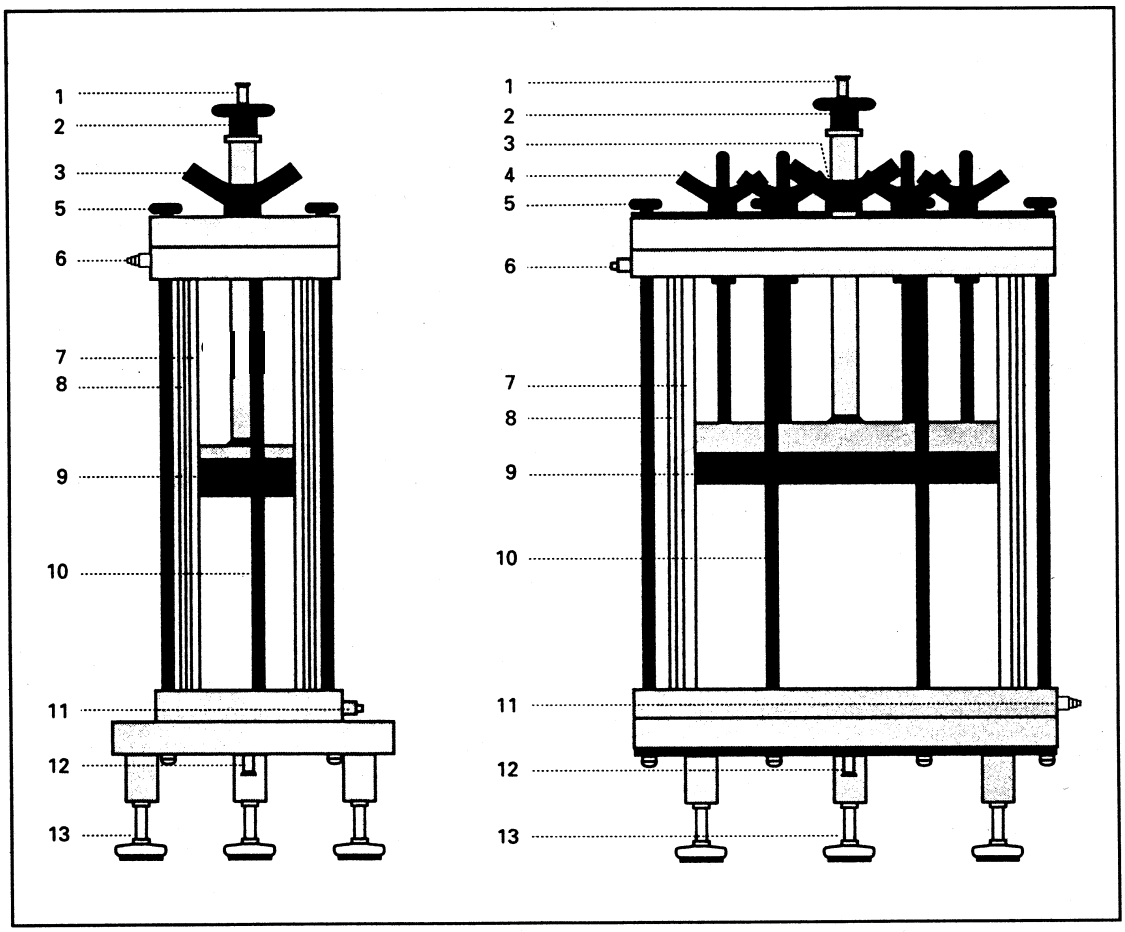

Figure 1: General Description of Upscale® Columns

1 - Sanitary connection (column inlet)
2 - Seal actuation hand wheel
3 - Bed height adjustment handle
4 - Pressure rod clamp handle (only for 300 and 450 mm dia. columns)
5 - Piston / tie rod nuts
6 - Heat exchange port
7 - Column tube (borosilicate glass)
8 - Acrylic protective jacket
9 - Adjustable piston-to-tube seal (EPDM)
10 - Tie rod column tube unit
11 - Heat exchange port
12 - Sanitary connection (column outlet)
13 - Adjustable foot

1415 Hyde Park Avenue
Boston, MA 02136-2699 USA
(617) 326-0444 phone, (617) 326-0443 fax

Table I: Geometric features (1) of Upscale® Columns

Part No.	Column	I.D. (mm)	Max. Useful Length (mm)	Piston Stroke (mm)	Volume (L)
265111	90 x 300	90	250	250	0 - 1.6
265117	90 x 600	90	550	300	.9 - 3.5
265118	90 x 900	90	850	300	2.9 - 5.4
265121	180 x 300	180	250	250	0 - 6.4
265127	180 x 600	180	550	300	3.8 - 14
265128	180 x 900	180	850	300	11.5 - 21.6
265131	300 x 300	300	210	210	0 - 14.8
265137	300 x 600	300	510	300	7.8 - 36
265138	300 x 900	300	810	300	28.9 - 56.2
265141	450 x 300	450	210	210	0 - 33.4
265147	450 x 600	450	510	300	17.1 - 79.3
265148	450 x 900	450	810	300	63.7 - 128.8

(1) Essential Life Solutions may at times change the features of the columns described in this manual without notice.

(2) 1 inch = 25.4mm

The available diameters and tube heights and the adjustable piston range allows selection of the optimal volume and geometry for the chromatographic process.

The running conditions for Upscale® glass columns are detailed in appendix 1: *Operating specifications.*

Scaling up is simplified because flow distribution efficiency is maintained for all column sizes. Chemical compatibility and manipulation operations are identical across the range of sizes (see appendix 1: *Operating specifications*, and appendix 3: *Chemical resistance*).

1415 Hyde Park Avenue
Boston, MA 02136-2699 USA
(617) 326-0444 phone, (617) 326-0443 fax

Upscale® columns consist of three sub-assemblies (fig. 2):

- the column tube
- the piston with adjustable stroke
- the base assembly

Assembly and disassembly of the column into these three sub-assemblies for routine maintenance is easy. The protocol is detailed in section III.1.

NOTE: It is not recommended to disassemble the sub-assemblies (e.g. to remove the jacket or the central screw of the piston). The sub-assemblies are set by the manufacturer and do not require maintenance. Essential Life Solutions should be consulted for any operation which is not detailed in this manual.

1415 Hyde Park Avenue
Boston, MA 02136-2699 USA
(617) 326-0444 phone, (617) 326-0443 fax

II.2 - THE COLUMN TUBE SUB-ASSEMBLY

The column tube sub-assembly (glass tube + jacket) consists of two polypropylene flanges connected with stainless steel tie rods which must not be disassembled.

Upscale® columns feature an acrylic jacket which protects the glass tube. The jacket also allows the user to circulate heat exchange fluid between the jacket and glass barrel.

Each flange of the tube sub-assembly is equipped with a threaded hose barb connector for 6 mm internal internal diameter flexible tube. The thread is ¼" gas Whitworth straight pipe thread. These connectors allow the column to be connected to a cooling/heating circuit. **Pressure in the jacket should not exceed 0.5 bar (7.25 psi).**

The bottom flange carries two o-rings which with o-rings in place provide the seal with the base plate and frit.

1415 Hyde Park Avenue
Boston, MA 02136-2699 USA
(617) 326-0444 phone, (617) 326-0443 fax

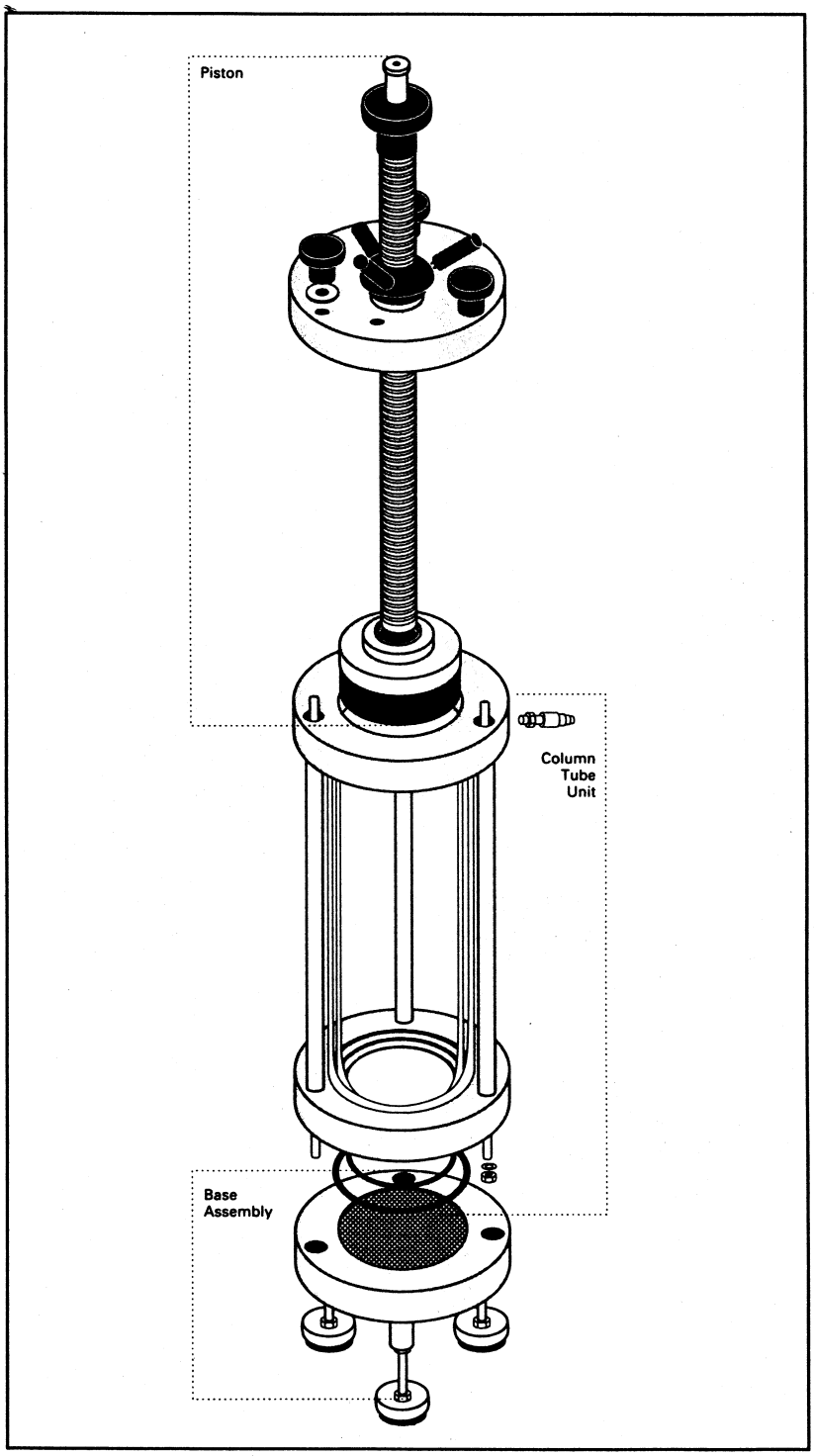

Figure 2: Main sub-assemblies of the Upscale® columns

Revision 2.0
1/1/02

1415 Hyde Park Avenue
Boston, MA 02136-2699 USA
(617) 326-0444 phone, (617) 326-0443 fax

II.3 - BASE ASSEMBLY

The base plate (fig. 3) of Upscale® glass columns contains a flow distributor topped by a polyethylene frit. The frit diameter is slightly larger than that of the glass tube and both are sealed with o-rings. Therefore there is minimum dead volume in the lower part of the column. The base plate is fixed to the column tube sub-assembly via the extending stainless steel tie rods of the tube sub-assembly.

The adjustable column feet are fixed on the base plate. A bubble level is supplied so that the column can be easily adjusted to the vertical position. The heights of the individual feet can be adjusted by first loosening the 19 mm jam nut adjacent to the polypropylene stand off and then turning the 19 mm head of the leveling bolt adjacent to the foot pad. Retighten the jam nut when adjustments are complete. Adjustable locking column stabilization assemblies can be provided for the 300 and 450 mm diameter as optional accessories.

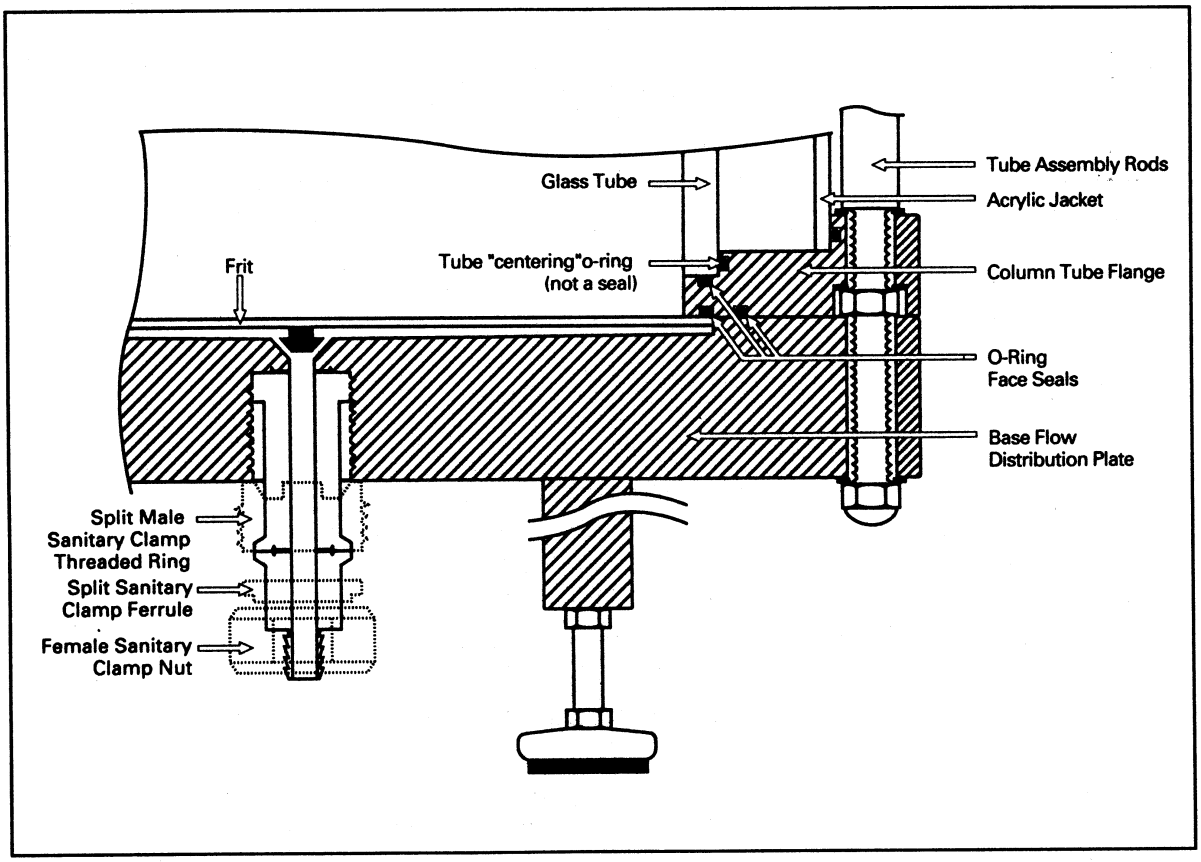

Fig. 3 : Base assembly

1415 Hyde Park Avenue
Boston, MA 02136-2699 USA
(617) 326-0444 phone, (617) 326-0443 fax

II.4 - PISTON SUB-ASSEMBLY

CAUTION: Do not attempt to adjust piston height before pressure rod clamps (300 and 450 mm columns only) have been disengaged and the adjustable piston-to-tube seal has been loosened.

The piston (fig. 4) allows the user to adjust the column bed height and volume (table I).

It is easily introduced into the column tube and is then fixed in place with hand tightened nuts on the stainless steel tie rods. The piston is raised or lowered in the column with the bed height adjuster handle.

The piston to glass barrel seal is obtained by compressing the piston seal actuated by clockwise rotation of the handle located on the end of the central screw. The descending motion during actuation of the seal is designed to eliminate dead volume. This reduces sample dilution, band broadening, accumulation of contaminating products and bacterial proliferation.

On large diameter columns (300 and 450 mm), additional stainless steel pressure rods link the flow distributor of the upper plate of the column. The rods are disengaged from the upper plate during movement of the piston and should be engaged when the final position of the piston has been reached. The pressure rods are engaged and disengaged by hand-tightening the pressure rod handles.

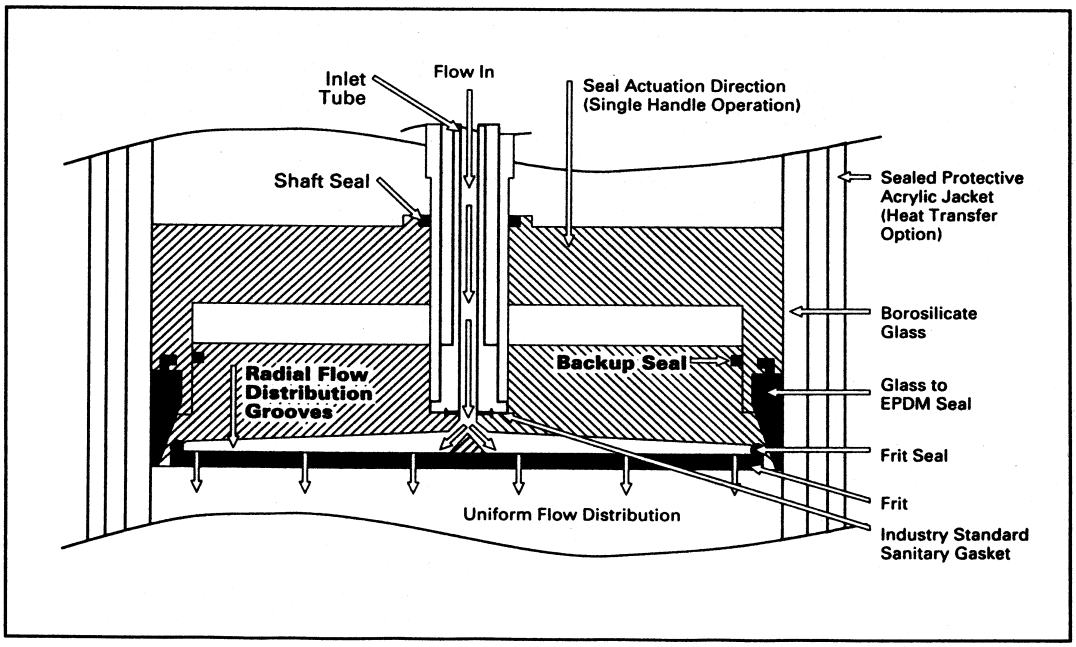

Fig. 4 : Cross section of piston flow adapter assembly

1415 Hyde Park Avenue
Boston, MA 02136-2699 USA
(617) 326-0444 phone, (617) 326-0443 fax

II.5 - FLOW DISTRIBUTOR (figure 5)

The two (top and bottom) flow distributors are identical except for a slightly larger diameter on the bottom. The column may be used in ascending as well as in descending flow direction.

The flow distribution system consists of :

- an anti-jetting device
- radial distribution channels
- 20 um (standard) polyethylene frit

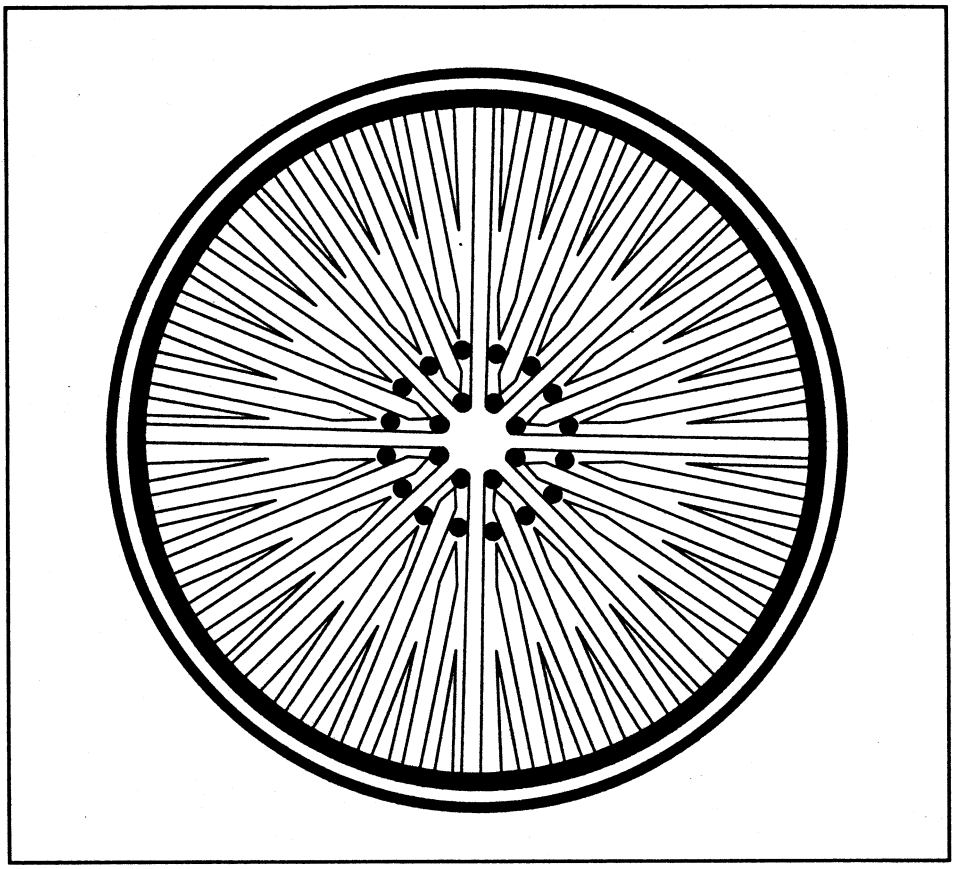

Figure 5: Upscale® flow distribution system

The design of the grooved radial distribution channels minimizes dead volume under the frit and optimizes flow distribution.

The polyethylene frit provides the support for the column packing material and increases efficiency of flow distribution by inducing a slight pressure drop between the anti-jetting device and

1415 Hyde Park Avenue
Boston, MA 02136-2699 USA
(617) 326-0444 phone, (617) 326-0443 fax

the packing material. An o-ring has been placed around the frit in order to prevent channeling of flow around the frit.

The polyethylene frits should be handles with care to maintain cleanliness.

Wetting the frits with 20% EtOH is strongly recommended before operation!

1415 Hyde Park Avenue
Boston, MA 02136-2699 USA
(617) 326-0444 phone, (617) 326-0443 fax

II.6 - CONNECTORS AND TUBING

The column inlet and outlet are equipped with sanitary connections (fig. 6), which are free of points of retention and are in accordance with international sanitary standards.

The following tubing is recommended to minimize back pressure and reduce contamination:

~ for 90, 180 mm dia. columns : 6mm (=1/4") I.D. tubing with sanitary clamp connection

~ for 300, 450 mm dia. columns : 9.5 mm I.D. (3/8" I.D.) tubing with sanitary clamp connection

Each column is supplied with **2 clamps and 4 sanitary gaskets,** as well as **2 sanitary flanges with barbed fitting connectors** for tubing as above.

The sanitary flanges with barb fitting provides connection of the column to other accessories, which may not have sanitary flanges, via flexible tubing.

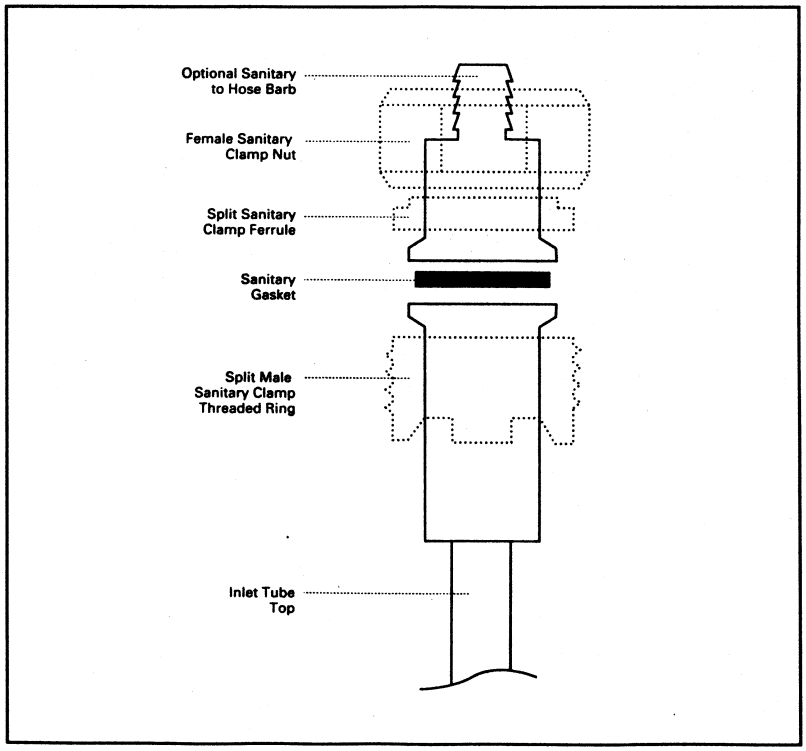

Fig. 6 : Sanitary connection

Revision 2.0
1/1/02

1415 Hyde Park Avenue
Boston, MA 02136-2699 USA
(617) 326-0444 phone, (617) 326-0443 fax

III – METHOD OF USE

III.1 - PISTON AND BASE ASSEMBLY / FRIT REPLACEMENT

III.1.1 – Column disassembly

Follow the instructions below to inspect and wash the three column sub-assemblies:

1) Piston removal:

- Decompress the piston seal:
- * Check that no pressure is applied in the column.
- * Unscrew the seal handwheel.

- Remove the piston from the column tube after unscrewing all nuts on the tie rods. For 300 and 450 mm diameter columns, to simplify handling of the frit, it is recommended to turn the column piston over and rest it upside down on the pressure rods.

- CAUTION: Be sure pressure rod handles are clamped. A tool is provided to remove frit retaining ring. Remove frit.

2) Base plate removal :

- Remove the base plate by unscrewing the blind nuts at the bottom of the tie rods. Lift column tube assembly off base and gently set it on tie rods. Remove frit.

- Wash all the parts with a non-abrasive detergent or a diluted acid or basic solution (0.5 N) then rinse with demineralized water.

III.1.2-Column assembly

1) Installing the polyethylene frits :

The frits should be kept in their individual packaging until use to maintain cleanliness. After removing this packaging, the frits should be handled with care in order to prevent damage or contamination. The largest diameter frit is inserted into the flow distributor of the base plate. The frits should be wetted before running the column. Essential Life Solutions recommends 20% EtOh

1415 Hyde Park Avenue
Boston, MA 02136-2699 USA
(617) 326-0444 phone, (617) 326-0443 fax

(Ethanol) wetting agent. Frits should be immersed, if possible. The smaller diameter frit of the piston distributor is inserted after ensuring that the o-ring is correctly installed in its groove around the flow distribution cell. A retainer clip is supplied to maintain the piston distributor frit in position.

2) Place the base plate equipped with its frit on the spot where the column will be filled or will be running, since its is not recommended to move large columns once packed. Inspect the two o-rings on the bottom of the column tube. Put the column tube (o-ring side down) on the base plate and fix the whole unit by screwing the acorn nuts symmetrically on the tie rods. Be sure to include the washers.

3) Introduce the piston into the column tube. The unit (piston and column tube) is fastened by hand tightening the nuts on the tie rods. Connect the column to the fluid pumping system (see Appendix 4). Make the axis of the column tube plumb (in the vertical position) by adjusting the individual foot heights and using the level bubble.

   Practical column packing recommendations are given in III.2.2.

III.2 - PACKING THE COLUMN

III.2.1. - Introduction

Proper column packing is critical factor in successful chromatography. The use of a good packing procedure will avoid the creation of heterogeneous areas in the packed bed and gradients of bead size from the top to the bottom of the column.

The protocols described below are valid for semi-rigid and rigid supports such as TRISACRYL R and SPHERODEX R supports, and for non-rigid supports such as ULTROGEL R.

III.2.2 - Packing protocol for rigid or semi-rigid supports (e.g. TRISACRYL R and SPHERODEX R)

1) Transfer the chromatographic support into a large container. After the gel has settled, remove the excess liquid above the gel.

CAUTION : In case sodium azide is present in the supernatant of the chromatographic support, the pH of the 1 M NaCl solution should not be lower than pH 5.5!

1415 Hyde Park Avenue
Boston, MA 02136-2699 USA
(617) 326-0444 phone, (617) 326-0443 fax

2) Add a l M NaCl, pH 7 solution until the total volume reaches 125 – 140 % of the settled gel volume (e.g. 10 liters of settled support mixed with 2.5 – 4 liters of solutions). Additional liquid can be added if needed for ease in transferring.

3) Stir the suspension manually until it is homogeneous, making sure that no air bubbles appear, and that the suspension remains fluid (do not allow the support to settle).

4) Remove air trapped in the bottom flange of the column by one of the methods 4a or 4b below :

4a – While the outlet valve is closed, introduce about 0.3 column volume of a 1 M NaCl, pH 7 solution into the column (fig. 7A). Open the outlet valve and allow the liquid to flow until only 0.1 column volume remains (fig. 7B and 7C). Close the outlet valve.

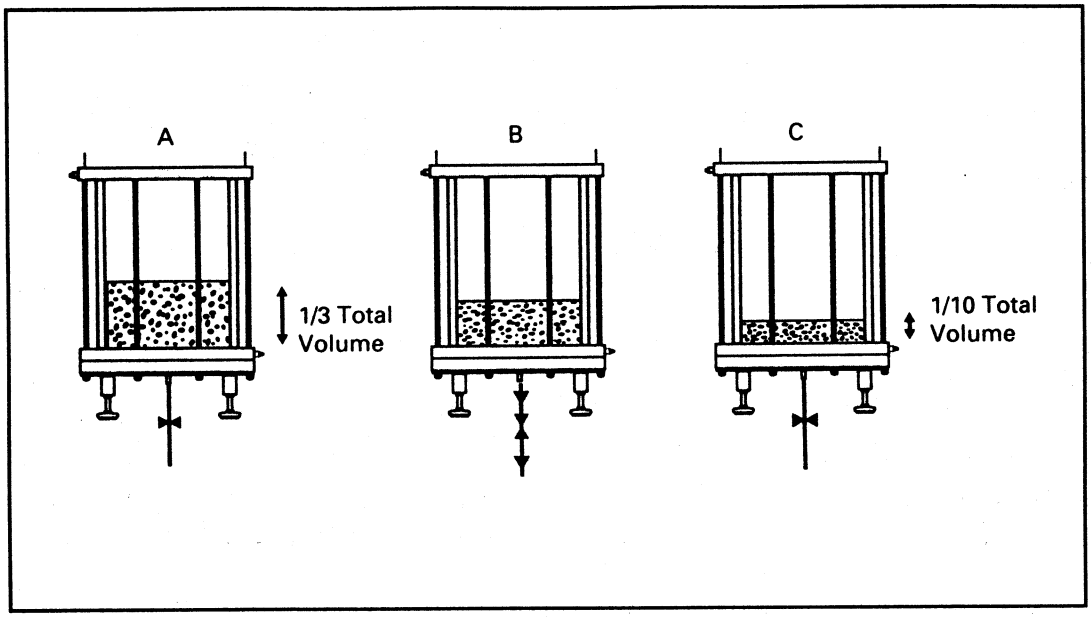

Fig. 7 : Preliminary operations before introducing the suspension :
7A : Introduce 1/3 of total column volume (1 M NaCl, pH 7).
7B : Remove the excess of solution and air bubbles.
7C : Maintain about 0.1 column volume and close the outlet.

4b – Connect the outlet valve to a pump and fill the column with the l M NaCl, pH 7 solution until it reaches 1/10 of the column volume. Close the outlet valve and disconnect the pump.

1415 Hyde Park Avenue
Boston, MA 02136-2699 USA
(617) 326-0444 phone, (617) 326-0443 fax

5) While the outlet valve of the column is closed, gently pour the homogeneous suspen sion of the chromatographic support down the side wall of the column to avoid trapping air (fig. 8A).

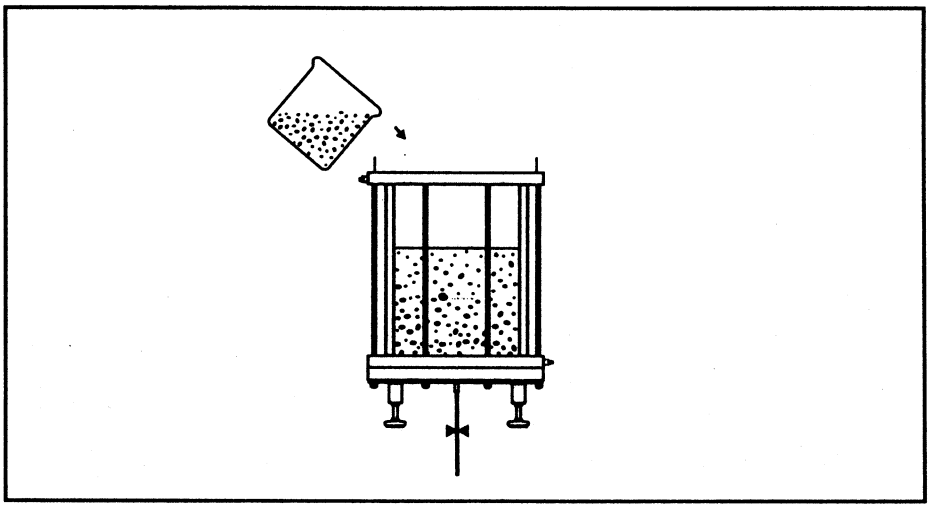

Fig. 8 : Packing the column : Gently pour along side of glass tube

6) Once the suspension has been totally transferred, stir again manually until the suspension becomes homogeneous, being careful to avoid contact with the column wall and air entrapment.

7) Introduce the piston while the inlet valve of the column is opened (fig. 9A). During this operation, allow the excess buffer to discharge from the column and remove air bubbles from the piston (by tilting piston) as the piston is lowered into the column (fig. 9B). Fix the piston on the column tube using the nuts provided. Lower the piston gradually to the appropriate height.

<u>NOTE :</u> pressure rod handles must be turned fully counter clockwise on 300 and 450 m diameter columns before adjusting piston height.

8) When the piston contacts the suspension upper surface, tighten the piston seal. Lock pressure rod handles fully clockwise on 300 and 450 mm diameter columns.

9) At this point, close the inlet valve, connect a bubble trap to the column inlet (optional) downstream of the feed pump (fig. 9C). Make sure to keep air bubbles out of the column.

1415 Hyde Park Avenue
Boston, MA 02136-2699 USA
(617) 326-0444 phone, (617) 326-0443 fax

10) Open the inlet and outlet valve of the column and start the pump at a moderate flow rate with 1 M NaCl pH 7.0. The pump flow rate should be continuously adjusted to generate a pressure of 0.2 – 1 bar (3-14.5 psi), at the inlet of the column (fig. 9D). Alternatively a flow rate 1.3 times the highest process flow is recommended. When the height of the bed is stabilized, stop the pump and close the outlet valve.

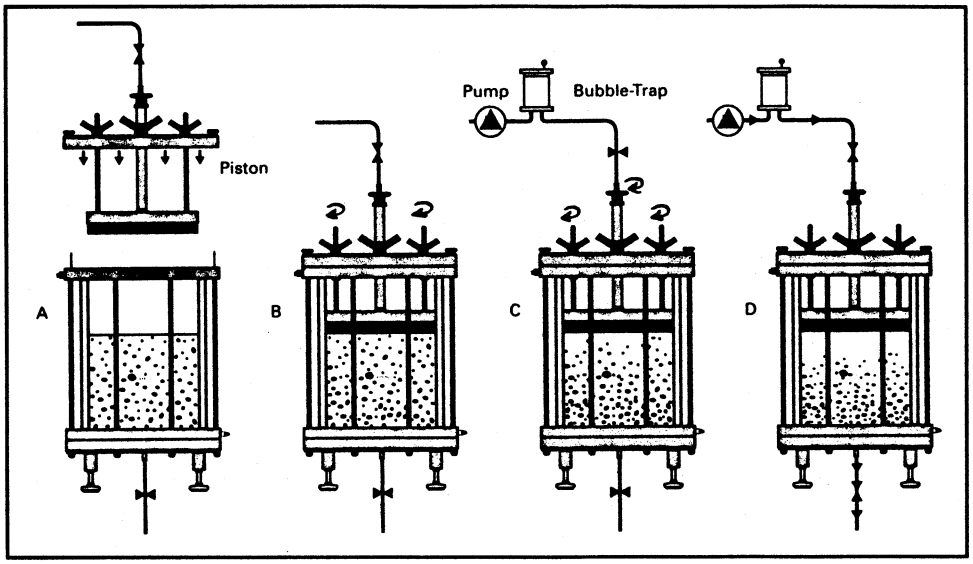

Fig. 9 : Piston installation :
9A : Introduce the piston. Tilt piston to remove air bubles, if necessary.
9B : Lower the piston on the gel suspension (inlet valve opened).
9C : Compress the piston seal, connect bubble-trap (optional) and pump.
9D : Pack with pump (inlet and outlet opened). Use process flow rate.

11) Back-off compression of the piston seal (turn piston seal actuation handwheel counter clockwise) (and pressure rods on 300 and 450 mm diameter columns) leaving the seal lightly in contact with the glass column wall, and lower the piston gradually. When the frit contacts the surface of the packed chromatographic support, tighten the piston seal (fig. 10) (and pressure rods).

<u>NOTE :</u> To fully pack the column, allow for a large quantity of l M NaCl, pH 7 solution (10 column volumes minimum).

1415 Hyde Park Avenue
Boston, MA 02136-2699 USA
(617) 326-0444 phone, (617) 326-0443 fax

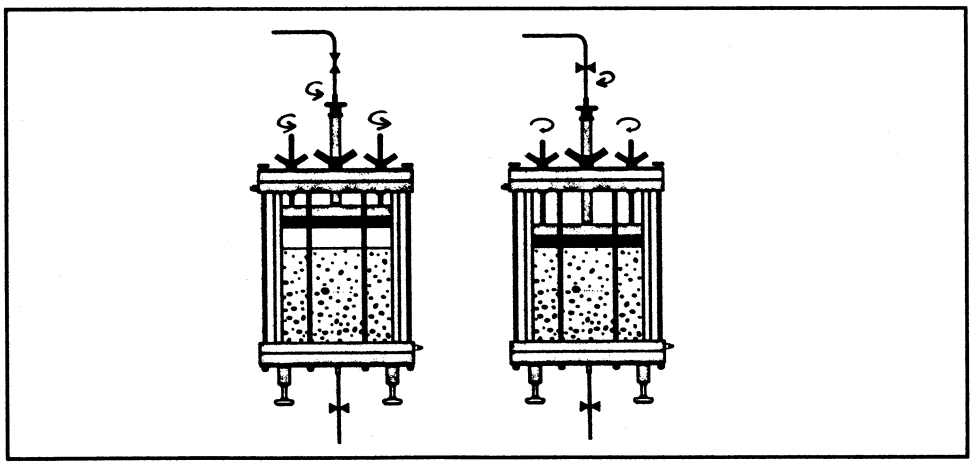

Fig. 10 : Final adjustment of the piston on the surface of packed gel

1) Open the inlet valve of the column and start the pump. The packed column is now ready for operation.

CAUTION : pH should never be lower than 5 – 5.5 as long as sodium azide is present in the storage buffer.

III.2.3 - Packing procedure for non-rigid supports (e.g. BioSepra ULTROGEL R AcA and A, HA-ULTROGEL R)

Follow instructions detailed in section III.2.2 from point l to point 6, then allow the support to settle. It is recommended to open the outlet valve to allow flow, which speeds up the bead sedimentation, and prevents them from classifying according to particle size. Then follow the instructions of section III.2.2 from point 7 to point 12, referring to the maximum packing pressure for the support used.

III.2.4 – Packing evaluation

Chromatographic efficiency is dependent upon the packing procedure and particle size. The column packing method can change efficiency, resolution, peak tailing and / or fraction dilution.

A simple method for the evaluation of packed bed quality (appendix 5) to determine the

1415 Hyde Park Avenue
Boston, MA 02136-2699 USA
(617) 326-0444 phone, (617) 326-0443 fax

height equivalent to a theoretical plate (HETP) of the support.

III.3 – CLEANING

A cleaning procedure includes the three following steps: regeneration of the chromatographic support, sterilization and depyrogenation.

Regeneration eliminates mineral and organic contaminants which are non-specifically fixed on the chromatographic resin. These molecules are most often lipid substances (including pyrogens), protein aggregates, pigments, polyphenols or metal complexes. These substances decrease the performance of the packing material (capacity, resolution, purity and yield). These problems may be overcome by using a regeneration solution (table II) which should be selected according to the nature of the contaminant and the chemical resistance of the packing material.

Sterilization involves the removal of micro-organisms by an appropriate chemical treatment. Sodium hydroxide is commonly used for the sterilization of chromatographic supports. Ethanol based solutions containing acetic acid or sodium hydroxide are also efficient (see example in appendix 6).

Depyrogenation eliminates endotoxins fixed on the chromatographic support. According to the solution used, this operation may be performed at the same time as sterilization, or in a following step.

Maintaining a column sterile requires a number of precautions:

- After disassembling the column to its sub-assembly components: column tube unit, piston and base, wash each part with a sanitizing solution (diluted sodium hypochloride, 0.5 N NaOH). Frits must be immersed in this solution for 30 to 60 min.

- Rinse extensively with an apyrogenic sterile solution before re-assembling the column.

- Column should be packed (see section III.2) following clean room precautions, especially concerning the working environment, which should be clean. Solutions pumped into the column must be sterilized and checked for pyrogens.

- The chromatographic support will be decontaminated. It is advisable to include 0.2 um filters in-line at column inlet and outlet.

1415 Hyde Park Avenue
Boston, MA 02136-2699 USA
(617) 326-0444 phone, (617) 326-0443 fax

TABLE II: Cleaning procedures according to the nature of the absorbed material to be eliminated.

TREATMENT	REGENERATION (elution of strongly absorbed molecules)	STERILIZATION	DEPYROGENATION
1-2 M sodium chloride	Highly charged molecules	Ineffective	Ineffective
Buffers pH 3-5	Highly charged molecules	Ineffective	Ineffective
Pronase treatment, neutral pH, calcium ions	Hydrolysis of adsorbed proteins	Ineffective	Ineffective
Pepsin treatments pH 1.5-2	Hydrolysis of adsorbed proteins	Ineffective	Ineffective
Non-ionic detergents (e.g. Triton X-100, Tween 80)	Removal of hydrophobic proteins and lipidic substances	Ineffective	Ineffective
Cationic detergents pH 9-11	"	Ineffective	Possible elimination of pyrogens
Non ionic detergents in acidic solution pH~3 (acetic acid)	"	Ineffective	Possible elimination of pyrogens
Urea 6-8 M	Removal of protein aggregates	Ineffective	Unknown
1-100 mM EDTA in neutral or slightly acidic solution	Removal of metal complexes	Ineffective	Ineffective
2-3 M sodium hyydroxide + 0.1-1 M hydrochloric acid	Removal of various small charged molecules and pigments	Ineffective	Elimination of pyrogens
0.1-1 M sodium hydroxide	Removal of bound hydrophobic proteins, lipopoly-saccharides and other unknown contaminants	Effective	Elimination of pyrogens
60% ethanol, 0.5-1 M acetic acid	Elimination of lipids, pigments, lipopolysaccharides and other lipophilic substances	Very Effective	Elimination of pyrogens
50-80% acetic acid	Solubilization and elimination of precipitated proteins	Unknown	Unknown
40-60% ethanol	Removal of certain proteins and lipid-like substances	Unknown	Unknown
isopropanol gradient up to 100%	Removal of non polar lipids	Ineffective	Unknown
0.1-1 M mineral or organic acids	Elimination of various charged molecules and hydrolysis of some bound substances	Unknown	Unknown
60% ethanol, 0.1 M and 1 M HCI	Elimination of various charged molecules and lipids	Unknown	Elimination of pyrogens

1415 Hyde Park Avenue
Boston, MA 02136-2699 USA
(617) 326-0444 phone, (617) 326-0443 fax

IV - MAINTENANCE

Columns have a simple design utilizing few parts, for simple cleaning and maintenance.

It is recommended to inspect the frits regularly and to wash them with detergent at each packing operation.

The flow distributors and the internal surface of the glass tube should be washed with detergent, then rinsed with demineralized water. No abrasive should be used on glass.

To maximize frit lifetime, it is recommended to filter all solutions pumped into the column (e.g. 0.2 un for buffers and 0.45 um for protein solutions). A clogged frit may give loss of resolution, capacity and efficiency. If this occurs, it is necessary to wash the frit as soon as possible, or to replace it. If the pressure increase caused by the frit clogging is not too high (lower than the mechanical resistance of the column or support), it is possible to continue the run by decreasing the flow rate.

The seals of the column (two o-rings on the bottom flange of the glass tube, one o-ring in the piston flow distributor) should be regularly inspected and should be replaced if damaged.

V – WARRANTY

Essential Life Solutions offers a one- year limited guarantee on these columns covering defects in material and workmanship if used under conditions detailed in the instruction manual provided with the column. This guarantee does include frits, o-rings and glass tube.

1415 Hyde Park Avenue
Boston, MA 02136-2699 USA
(617) 326-0444 phone, (617) 326-0443 fax

Appendicies

1415 Hyde Park Avenue
Boston, MA 02136-2699 USA
(617) 326-0444 phone, (617) 326-0443 fax

APPENDIX 1- SPECIFICATIONS

*** Temperature Range:** +4 Deg C to + 40 Deg C (+39 Deg F to + 104 Deg F)

*** Pressure Range:**

Column Diameter:	**mm**	9	180	300	450
	inches	3.5	7	11.8	17.7
Working Pressure:	**bar**	6	4	3	2
	psi	87	58	43	29
Test Pressure:	**bar**	9	4.5	3.5	2.25
	psi	130	65	51	32

* 1 inch = 25.4 mm
** 1 bar = 14.5 psi
*** Working pressure = max. pressure continuously applied
**** Test pressure = max. pressure applied for quality control

Revision 2.0
1/1/02

1415 Hyde Park Avenue
Boston, MA 02136-2699 USA
(617) 326-0444 phone, (617) 326-0443 fax

APPENDIX 2 - MATERIALS OF CONSTRUCTION

Materials in contact with the solutions:

*Borosilicate Glass.....Column Tube

Note: Acrylic column tubes available on request.

*Poylpropylene.....Tube Flanges
Base Plate
Piston
Sanitary Connections

*EPDM..... .....Piston Seal
O-Ring
Sanitary O-Ring

*POLYETHYLENE..... .....Frits

Materials not in contact with the solutions:

*POLYMETHARCRYLATE.....Jacket
*TP316L STAINLESS STEEL.....Tie Rods
Feet
Internal Central Screw

Revision 2.0
1/1/02

1415 Hyde Park Avenue
Boston, MA 02136-2699 USA
(617) 326-0444 phone, (617) 326-0443 fax

APPENDIX 3 - CHEMICAL RESISTANCE

The Materials in contact with the solution are suitable for use with the following substances:

*Acetic acid 50%
*Hydrochloric acid 1N
*Sodium hydroxide 1 N
*Pure ethanol

NOTE:
Due to the wide range of solutions available please contact Essential Life Solutions prior to the purchase of your column.

1415 Hyde Park Avenue
Boston, MA 02136-2699 USA
(617) 326-0444 phone, (617) 326-0443 fax

APPENDIX 4 - SYSTEM CONFIGURATION EXAMPLES

*MAIN COMPONENTS OF A CHROMATOGRAPHIC SYSTEM

The hydraulic environment of a column includes:

- The feed pump, the outlet of which may be equipped with a purge valve and a pressure probe if required. The pressure measurement monitors the packing and purification operations, and in some cases is used to stop feed the pump as soon as the maximum level of pressure has been exceeded.

- The filtration system which prevents the introduction of impurities into the pump. The buffer solutions are generally filtered in line, whereas the samples must be previously clarified before their injection onto the column. The filtration system is connected to a set of valves (1 four-way valve and 2 three-way valves) either in line when the buffers are introduced into the column, or by-passed when the sample is injected.

- The bubble-trap system which eliminates introduction of air bubbles into the column, thus prevents the support from drying. The bubble-trap is by-passed when the sample is injected, in order to prevent diluting the sample.

- A four-way valve selects the direction of the fluids into the column (ascending or descending flow).

- A four-way or three-way valve connecting the column outlet to waste or fraction collection.

Several detectors at the column outlet allow the user to follow the purification (UV absorbance detector, conductivity and pH-meter).

Before the pump, a valve manifold allows user to select the solution to be injected into the column.

The valves and the pump are either manually or automatically operated. The system may be equipped with many probes providing greater safety (shutdown based on pressure limits, fluid levels or air trapped in the system).

1415 Hyde Park Avenue
Boston, MA 02136-2699 USA
(617) 326-0444 phone, (617) 326-0443 fax

*EXAMPLE

Fig. 11 shows an installation using a desalting column. This type of support allows the separation of macromolecules from low molecular weight substances, or to equilibrate a sample in the butter of a determined composition.

The first step (fig. 11A) consists of equilibrating the support in a buffer with appropriate ionic strength and pH. The bubble-trap and the filters are in line and the outlet is connected to waste.

The sample is loaded in the second step (fig. 11B). The bubble-trap and the filter are by-passed. Collection starts as soon as the UV peak appears at the column outlet (the detectors are not shown in this diagram).

The column is then washed with the equilibration buffer through the bubble-trap and the filter (fig. 11C). Collection continues until the UV signal has reached the baseline.

In a final step (fig. 11D), the column is regenerated and / or sterilized and / or depyrogenated (see section III.3). This operation is not necessarily performed after all cycles.

1415 Hyde Park Avenue
Boston, MA 02136-2699 USA
(617) 326-0444 phone, (617) 326-0443 fax

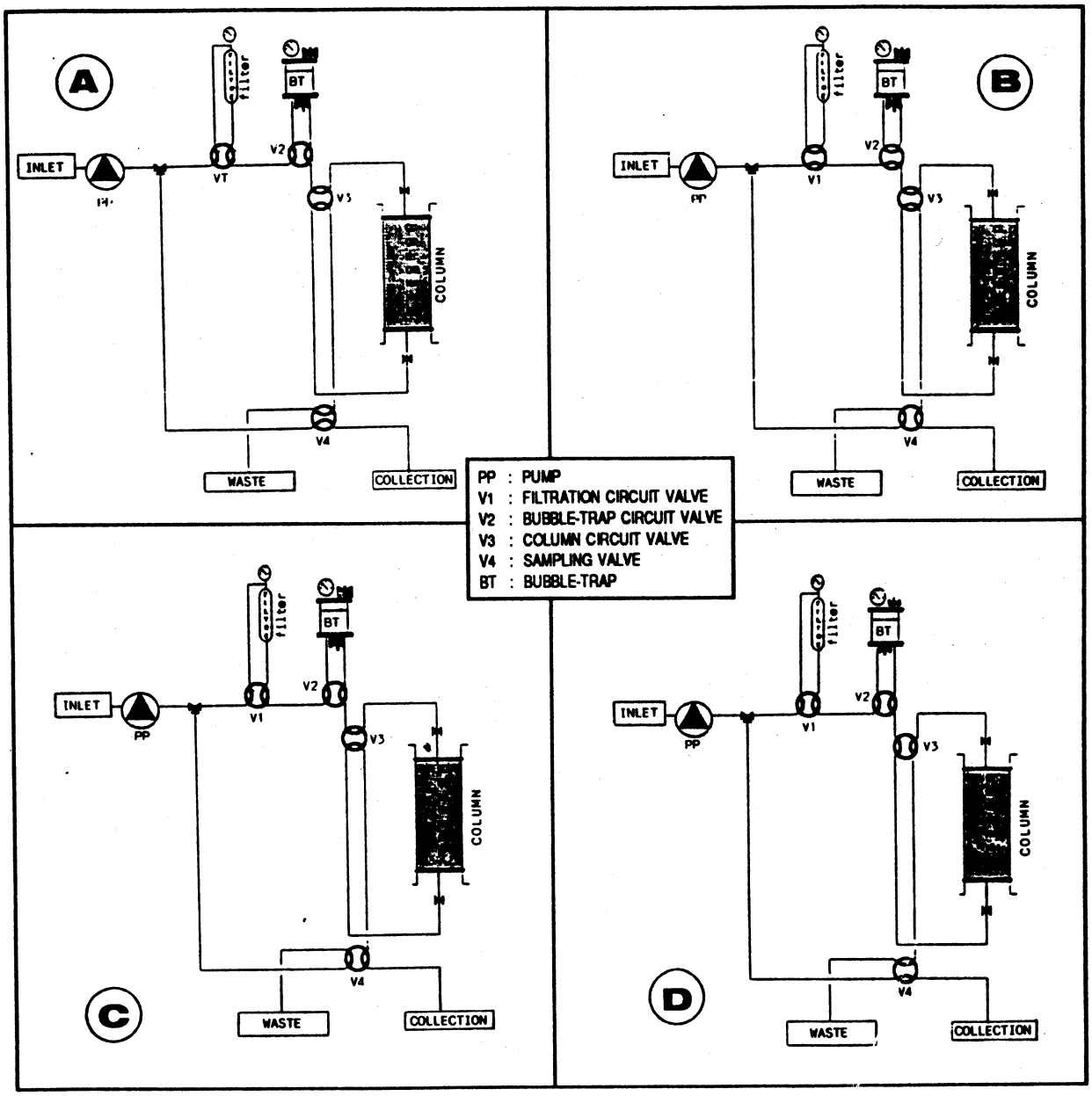

Fig. 11 : Examples of use : desalting

11A : Equilibration with buffer No. 1 (column protected by bubble-trap and filter)
11B : Sample injection (bubble-trap and filter by-passed) and beginning of collection
11C : Column washing and end of collection (column protected by bubble-trap and filter)
11D : Regeneration (option of ascending flow)

1415 Hyde Park Avenue
Boston, MA 02136-2699 USA
(617) 326-0444 phone, (617) 326-0443 fax

APPENDIX 5 - EVALUATION OF THE PACKED COLUMN EFFICIENCY

This evaluation is made by injecting a sample into the column and by following its elution, generally by conductivity or UV absorbance.

***PROTOCOL :**

- Equilibrate the chromatographic support in an appropriate buffer (e.g. 0.05 M Tris-HCl, pH 7.4 buffer for gel filtration or ion exchange supports such as DEAE, QA supports, or 0.05 M, pH 5.5 acetate buffer for ion exchange supports such as COOH or SP supports).

- Inject, as close as possible to the support (avoiding bubble-trap) a sample which will not interact with the support (e.g. 2.5% column volume of a sample constituted of 2% acetone in the buffer).

- Record the elution peak at the column outlet (UV absorbance at 280nm).

- Calculate the HETP using the following formulae:

$$HETP = \frac{L}{N}$$

$N = 16(Ve/W)^2$ $\quad$ $N = 5.54(Ve/WO5)^2$

L = Column height (cm)
N = Number of theoretical plates
Ve = Elution volume (1)
W = Peak width at the bottom (1)
WO5 = Half of the peak width (1)

Ve, W, WO5 must be expressed in the same unit (i.e. volume, time, length).

1415 Hyde Park Avenue
Boston, MA 02136-2699 USA
(617) 326-0444 phone, (617) 326-0443 fax

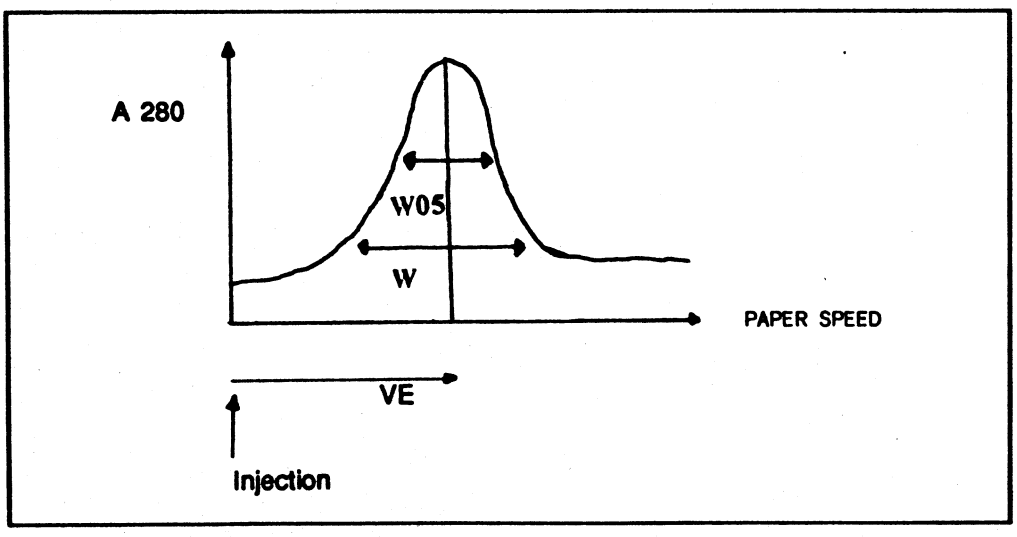

The lower the HETP value is, the better the packing quality is.
HETP standard values are supplied for each type of chromatographic support.

1415 Hyde Park Avenue
Boston, MA 02136-2699 USA
(617) 326-0444 phone, (617) 326-0443 fax

APPENDIX 6 - EXAMPLE OF A STERILIZATION / DEPYROGENATION METHOD

In the following example, DEAE TRISACRYL PLUS chromatographic support is depyrogenated and sterilized in a 40% ethanol – 0.2 N sodium hydroxide solution.

The passage of the solution is performed at a flow rate of 1 column volume per hour, during three hours. The resin is then rinsed with a concentrated (0.5 M Tris-HCl) buffer before being reequilibrated in the appropriate buffer.

The control of depyrogenation is followed by sampling at the column outlet (analysis by LAL test). The sensitivity of the test is 0.0125 EU/ml.

CAUTION : The 40% ethanol – 0.2 % sodium hydroxide solution is not compatible with phosphate buffers. It is necessary to insert a wash step between these two solutions, in order to avoid a saline precipitation on the column.

~ Experimental conditions:

~ Column volume…….3.6 liters
~ Height ……..570 mm
~ Diameter……90 mm

~ Injected solutions:

~40% ethanol – 0.2 N NaOH solution, for 3 hours at 57 cm.hour
~0.5 M Tris-HCl, pH 7 buffer, for 15 min. at 114 cm/hour
~0.05 M Tris-HCl, pH 7 buffer, for 1 hour at 114 cm/hour

~ Results:
Results are detailed in Table III and in Fig. 12.

In the described experiment, the final level of endotoxin which may be present in the column after depyrogenation is lower that the LAL test detection level ().0125 EU/ml).

1415 Hyde Park Avenue
Boston, MA 02136-2699 USA
(617) 326-0444 phone, (617) 326-0443 fax

Table III : Example of a depyrogenation procedure in column

INJECTED SOLUTION	ELUATE	ENDOTOXIN CONC. (ng/ml)	ENDOTOXIN CONC. (ng/ml)
	Nber OF VOLUMES	MINI	MAXI
40 % ETHANOL 0,2 N NaOH	0	12.5	125
	0.5		
	1		
	1.5		
	2		
	2 5		
	3		
TRIS HCl 0.5 M, pH 7 BUFFER	3.5		
TRIS HCl 0.05 M, NaCl 0.15 M pH 7 BUFFER	4	6.25	12.5
	4.5	1.25	6.25
	5.5	0.125	0.250
	6	0.0125	0.0125

Fig. 12 : Elimination of endotoxins during a depyrogenation procedure in column

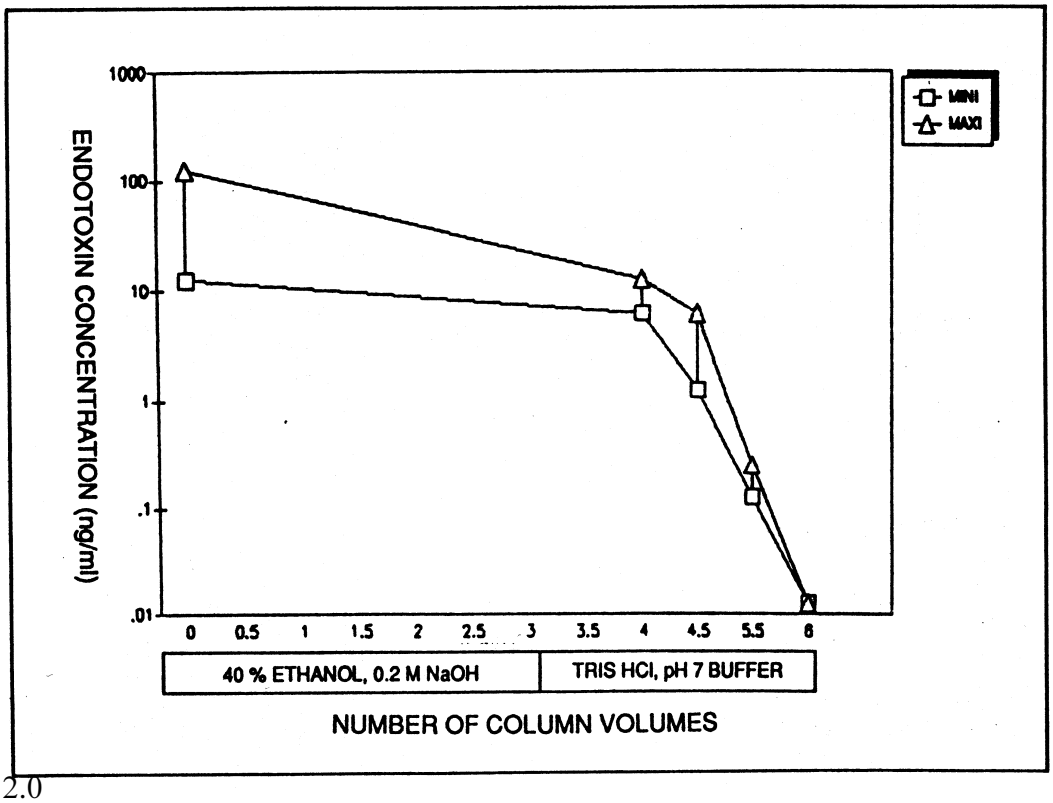

1415 Hyde Park Avenue
Boston, MA 02136-2699 USA
(617) 326-0444 phone, (617) 326-0443 fax

APPENDIX 7 - PARTS LIST

*** 90 mm Diameter Columns**

*** 180 mm Diameter Columns**

*** 300 mm Diameter Columns**

*** 450 mm Diameter Columns**

1415 Hyde Park Avenue
Boston, MA 02136-2699 USA
(617) 326-0444 phone, (617) 326-0443 fax

90 mm Column Body

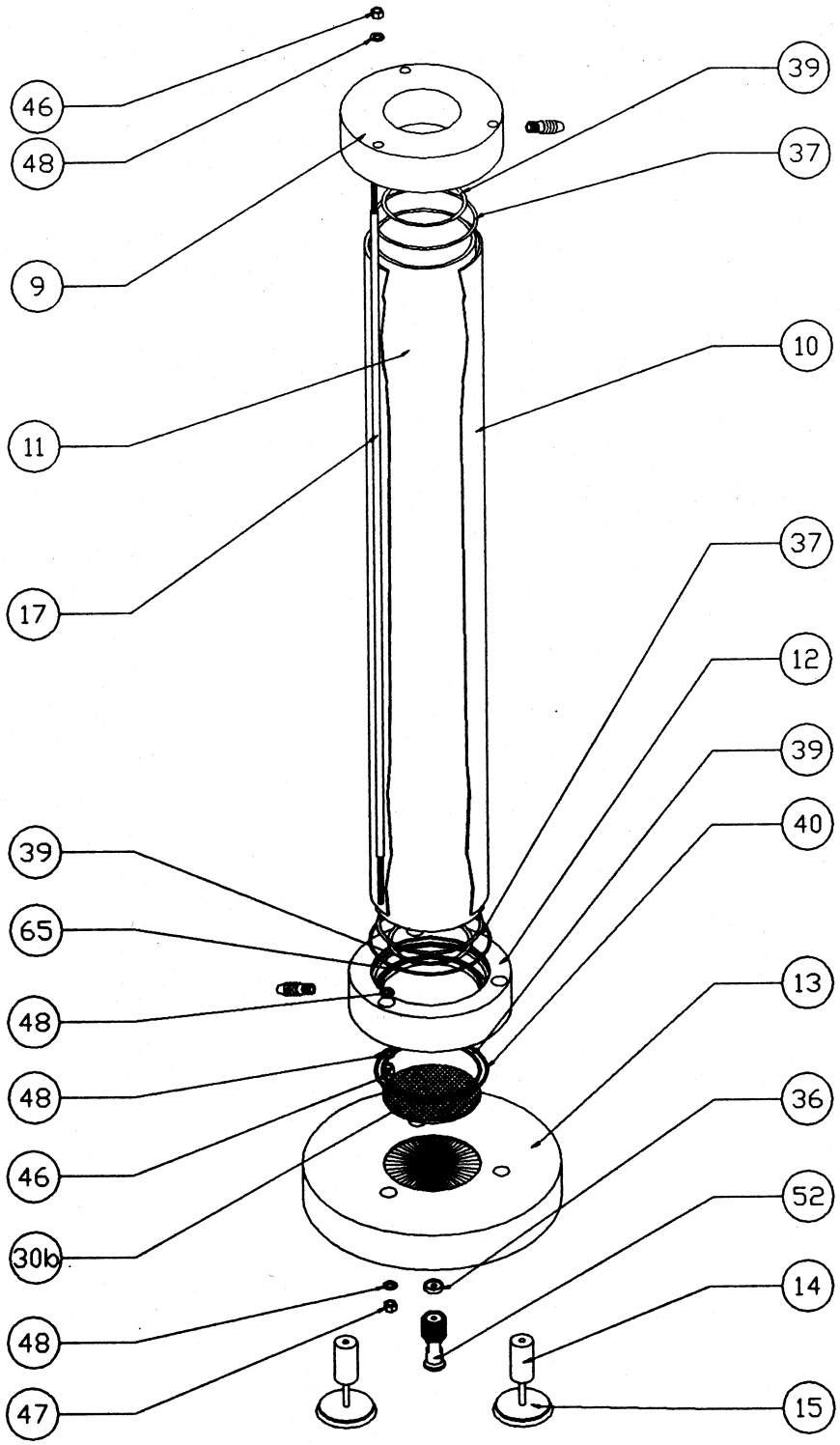

Revision 2.0
1/1/02

1415 Hyde Park Avenue
Boston, MA 02136-2699 USA
(617) 326-0444 phone, (617) 326-0443 fax

90 mm Column Piston

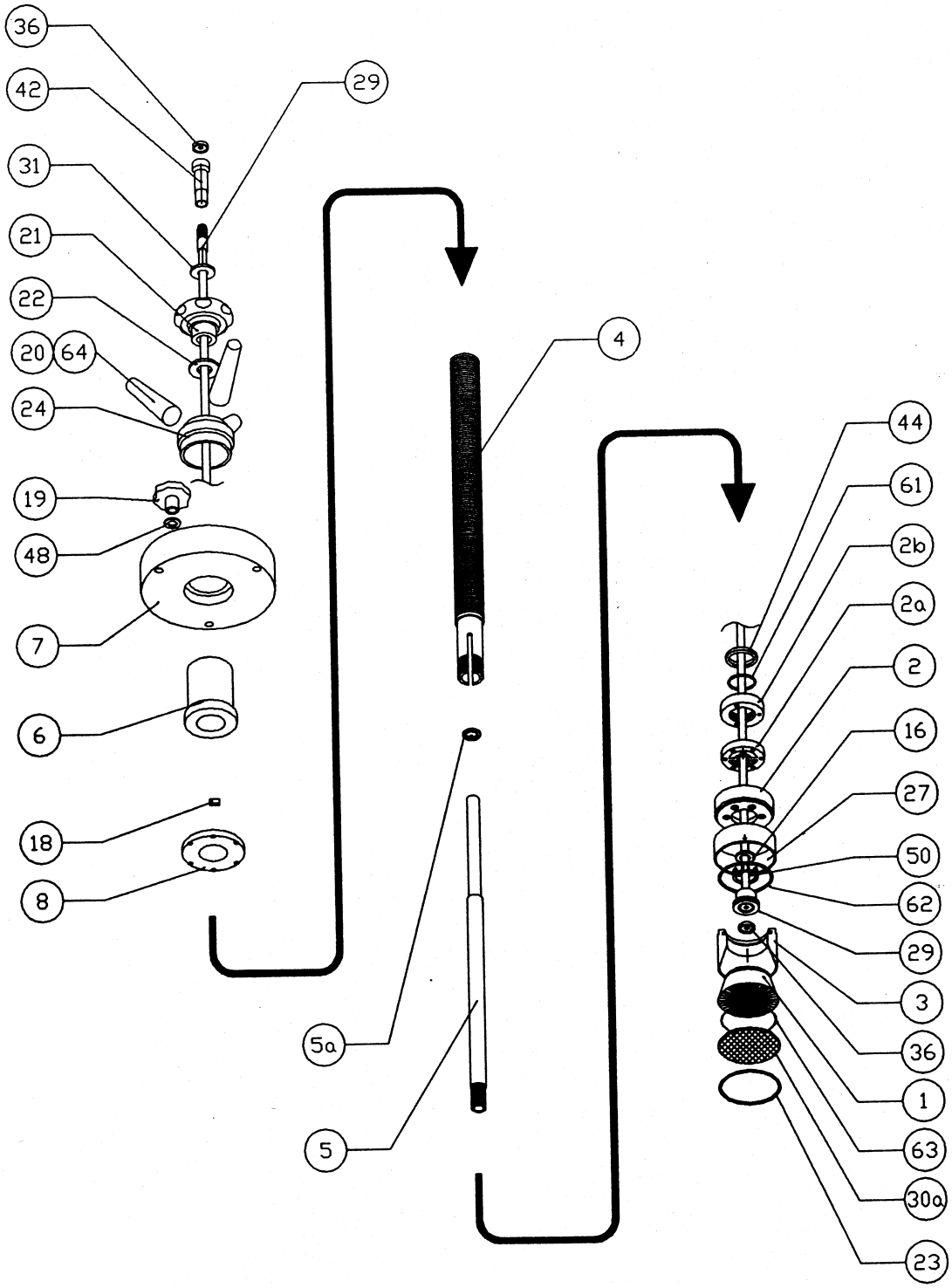

Revision 2.0
1/1/02

1415 Hyde Park Avenue
Boston, MA 02136-2699 USA
(617) 326-0444 phone, (617) 326-0443 fax

90 mm Column - Parts List

Part No.	Ref .No.	Description	Qua-n.	Material
266011	1	Flow Distribution Cell	1	Grey PP
200001	2	Seal Screwing Plate	1	Grey PP
200002	2a	Screwing Nut	1	316L SS
200003	2b	Wiper Support ID 90/180	1	Grey PP
266012	3	Piston Seal	1	EPDM
266013	4	Central Screw ID 90/180	1	Grey PP
266304	5	Internal Central Screw ID 90/180	1	316L SS
266035	5a	Internal Central Screw Washer	1	316L SS
266306	6	Drive Bolt	1	316L SS
266032	7	Piston Support	1	Grey PP
262863	8	Holding Washer	1	Grey PP
266053	9	Top Tube Flange	1	Grey PP
200004	10	Jacket - H300mm	1	PMMA
200005	10	Jacket - H900mm	1	PMMA
266014	10	Jacket - H600mm	1	PMMA
263781	11	Glass Tube - H300mm	1	Borosilica-te Glass
263782	11	Glass Tube - H600mm	1	Borosilica-te Glass
263783	11	Glass Tube - H900mm	1	Borosilica-te Glass
263734	12	Bottom Tube Flange	1	Grey PP
263735	13	Base Plate	1	Grey PP
266036	14	Stand Foot ID 90/180	3	Grey PP
266046	15	Foot ID 90/180	3	316L SS
263791	16	M12 Washer	1	316L SS
200032	17	Tie Rod - H900 ID 90/180	3	316L SS
266305	17	Tie Rod - H300 ID 90/180	3	316L SS
266353	17	Tie Rod - H600 ID 90/180	3	316L SS
200016	18	Key ID 90/180	1	316L SS
266015	19	Piston / Tie Nut ID 90/180	3	Bakelite
266320	20	Plastic Handle	3	Bakelite
266321	21	Seal Actuation Handle ID 90/180/300	1	Bakelite & SS

Revision 2.0
1/1/02

1415 Hyde Park Avenue
Boston, MA 02136-2699 USA
(617) 326-0444 phone, (617) 326-0443 fax

90 mm Column - Parts List

Part No.	Ref .No.	Description	Qua-n.	Material
266322	22	Stop Washer	1	316L SS
266016	23	Frit Retaining Ring	1	Grey PP
266323	24	Bed Height Adjustment Handle Support	1	Black Delrin
200006	27	Seal Clip	1	Grey PP
266325	28	Clip Key	1	Black PP
266017	29	Inlet Tube	1	Grey PP
266018	30a	Top Frit	1	Porous PE
266019	30b	Bottom Frit	1	Porous PE
286101	31	Control Wheel Washer	1	Black Delrin
200007	36	ID 6 Sanitary Gasket ID 90/180	2	EPDM
200008	37	Jacket O-Ring	2	EPDM
200009	39	Glass Tube & Bottom Frit O-Rings	3	EPDM
266020	40	Base Plate O-Ring	1	EPDM
266031	42	Inlet Sanitary Connection	1	Grey PP
266022	44	ID 40 Wiper	1	EPDM
266024	46	M8 Nut ID 90/180	6	SS
266045	47	M8 Blind Nut ID 90/180	3	SS
266342	50	Gage	1	Grey PP
266344	52	ID 6 Outlet Sanitary Conn. ID 90/180	1	Grey PP
200011	61	Internal Central Screw O-Ring	1	EPDM
200012	62	Flow Distribution Plate O-Ring	1	EPDM
200013	63	Top Frit O-Ring	1	EPDM
200039	64	Handle Axis	3	316L SS
263742	65	Glass Tube Centering O-Ring ID 90/180	1	EPDM

Revision 2.0
1/1/02

1415 Hyde Park Avenue
Boston, MA 02136-2699 USA
(617) 326-0444 phone, (617) 326-0443 fax

180 mm Column Body

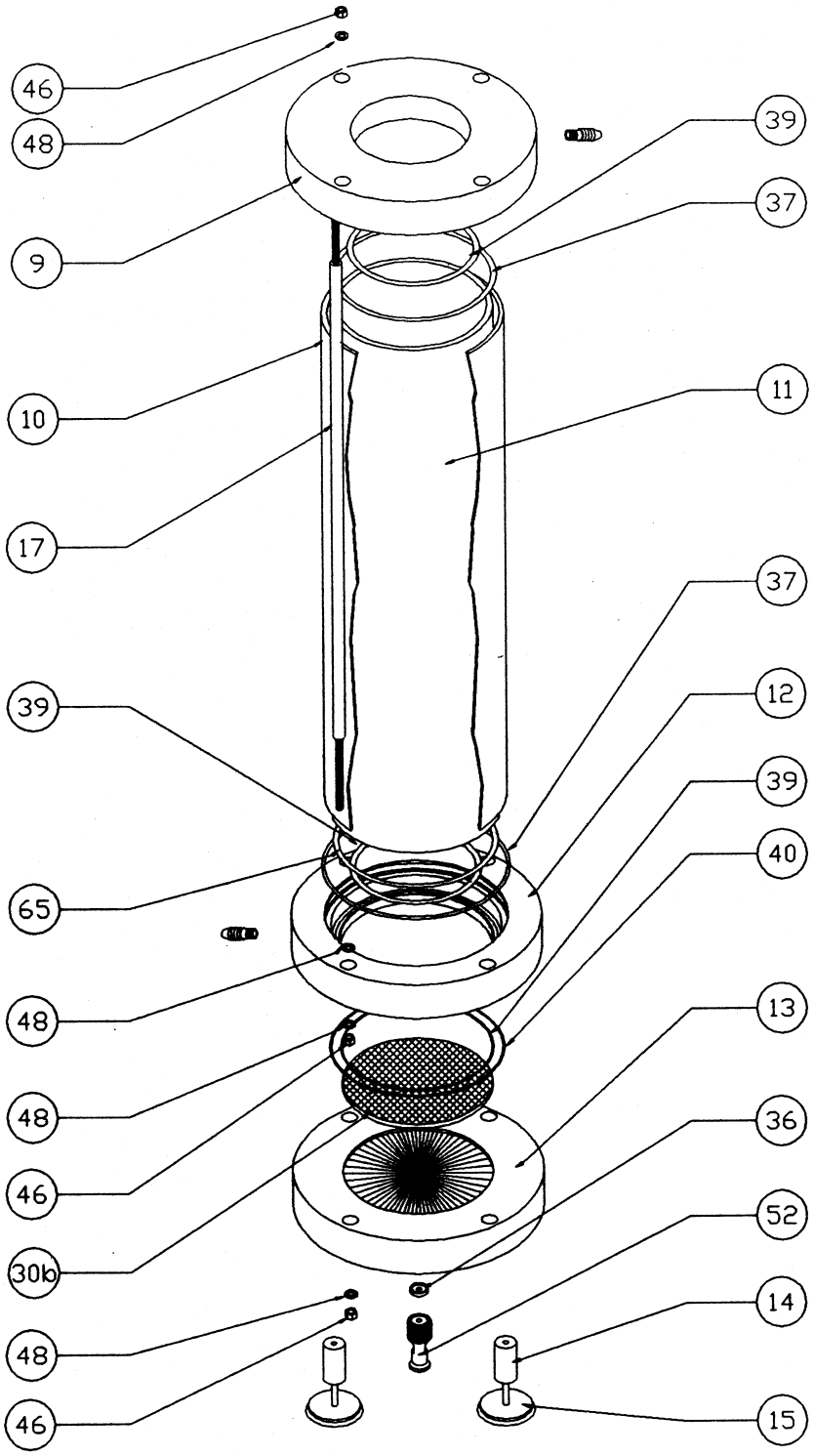

Revision 2.0
1/1/02

1415 Hyde Park Avenue
Boston, MA 02136-2699 USA
(617) 326-0444 phone, (617) 326-0443 fax

180 mm Column Piston

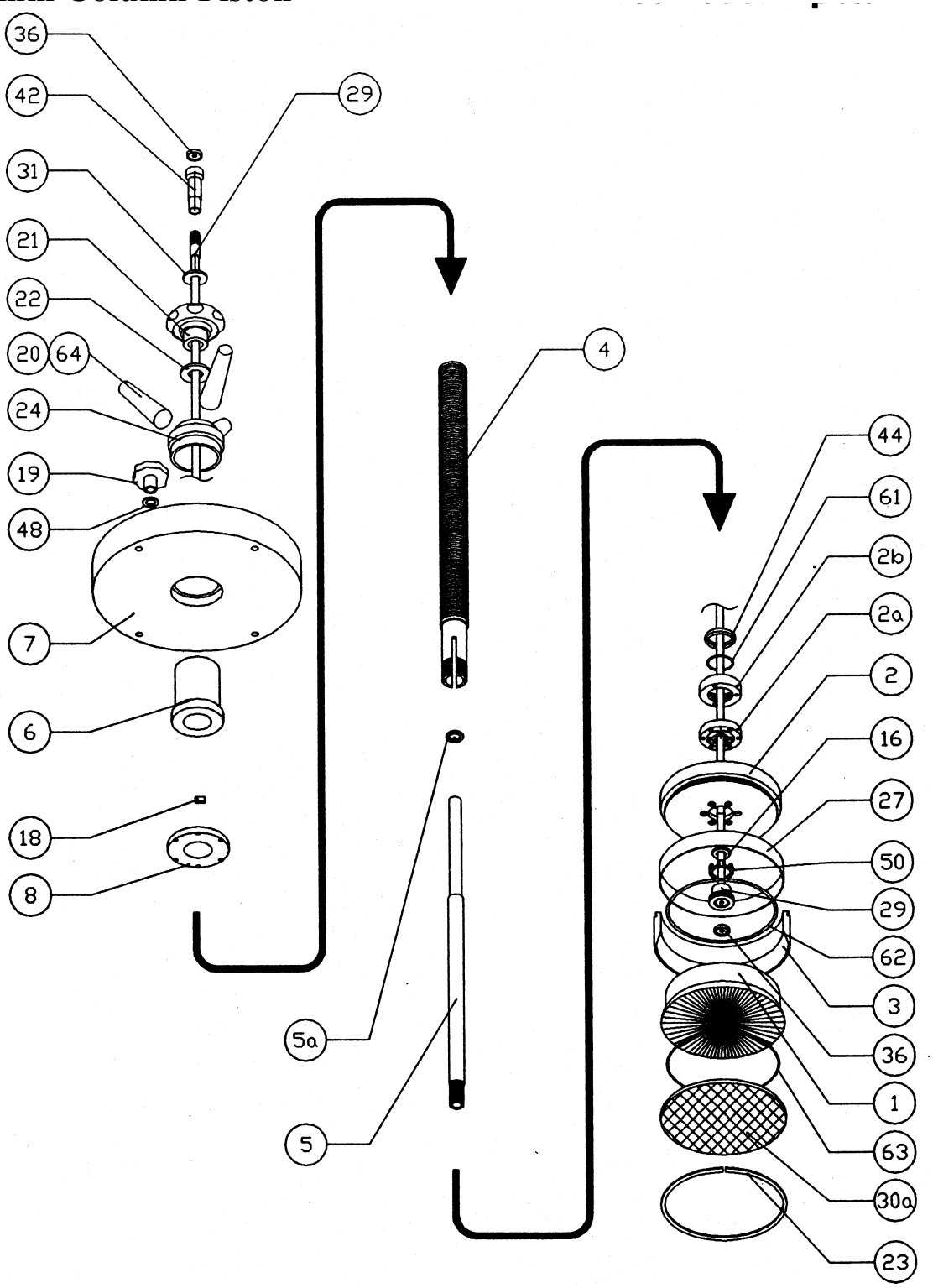

Revision 2.0
1/1/02

1415 Hyde Park Avenue
Boston, MA 02136-2699 USA
(617) 326-0444 phone, (617) 326-0443 fax

180 mm Column - Parts List

Part No.	Ref .No.	Description	Qua-n.	Material
266033	1	Flow Distribution Cell	1	Grey PP
200014	2	Seal Screwing Plate	1	Grey PP
200002	2a	Screwing Nut	1	316L SS
200003	2b	Wiper Support ID 90/180	1	Grey PP
266034	3	Piston Seal	1	EPDM
266013	4	Central Screw ID 90/180	1	Grey PP
266304	5	Internal Central Screw ID 90/180	1	316L SS
266035	5a	Internal Central Screw Washer	1	316L SS
266306	6	Drive Bolt	1	316L SS
263737	7	Piston Support	1	Grey PP
262863	8	Holding Washer	1	Grey PP
263738	9	Top Tube Flange	1	Grey PP
200017	10	Jacket - H300mm	1	PMMA
200018	10	Jacket - H600mm	1	PMMA
200019	10	Jacket - H900mm	1	PMMA
263794	11	Glass Tube - H300mm	1	Borosilica-te Glass
263795	11	Glass Tube - H600mm	1	Borosilica-te Glass
263796	11	Glass Tube - H900mm	1	Borosilica-te Glass
263739	12	Bottom Tube Flange	1	Grey PP
263740	13	Base Plate	1	Grey PP
266036	14	Stand Foot ID 90/180	3	Grey PP
266046	15	Foot ID 90/180	3	316L SS
263791	16	M12 Washer	1	316L SS
200032	17	Tie Rod - H900 ID 90/180	3	316L SS
266305	17	Tie Rod - H300 ID 90/180	3	316L SS
266353	17	Tie Rod - H600 ID 90/180	3	316L SS
200016	18	Key ID 90/180	1	316L SS
266015	19	Piston / Tie Nut ID 90/180	3	Bakelite
266320	20	Plastic Handle	3	Bakelite
266321	21	Seal Actuation Handle ID 90/180/300	1	Bakelite & SS

Revision 2.0
1/1/02

1415 Hyde Park Avenue
Boston, MA 02136-2699 USA
(617) 326-0444 phone, (617) 326-0443 fax

180 mm Column - Parts List (con't)

Part No.	Ref .No.	Description	Qua-n.	Material
266322	22	Stop Washer	1	316L SS
266037	23	Frit Retaining Ring	1	Grey PP
266323	24	Bed Height Adjustment Handle Support	1	Black Delrin
200021	27	Seal Clip	1	Grey PP
266325	28	Clip Key	1	Black PP
266038	29	Inlet Tube	1	Grey PP
266039	30a	Top Frit	1	Porous PE
266040	30b	Bottom Frit	1	Porous PE
286101	31	Control Wheel Washer	1	Black Delrin
200007	36	ID 6 Sanitary Gasket ID 90/180	2	EPDM
200023	37	Jacket O-Ring	2	EPDM
266041	39	Glass Tube & Bottom Frit O-Rings	3	EPDM
200024	40	Base Plate O-Ring	1	EPDM
266031	42	Inlet Sanitary Connection	1	Grey PP
266022	44	ID 40 Wiper	1	EPDM
266024	46	M8 Nut ID 90/180	6	SS
266045	47	M8 Blind Nut ID 90/180	3	SS
266342	50	Gage	1	Grey PP
266344	52	ID 6 Outlet Sanitary Conn. ID 90/180	1	Grey PP
200011	61	Internal Central Screw O-Ring	1	EPDM
200026	62	Flow Distribution Plate O-Ring	1	EPDM
200027	63	Top Frit O-Ring	1	EPDM
200039	64	Handle Axis	3	316L SS
263742	65	Glass Tube Centering O-Ring ID 90/180	1	EPDM

1415 Hyde Park Avenue
Boston, MA 02136-2699 USA
(617) 326-0444 phone, (617) 326-0443 fax

300mm Column Body

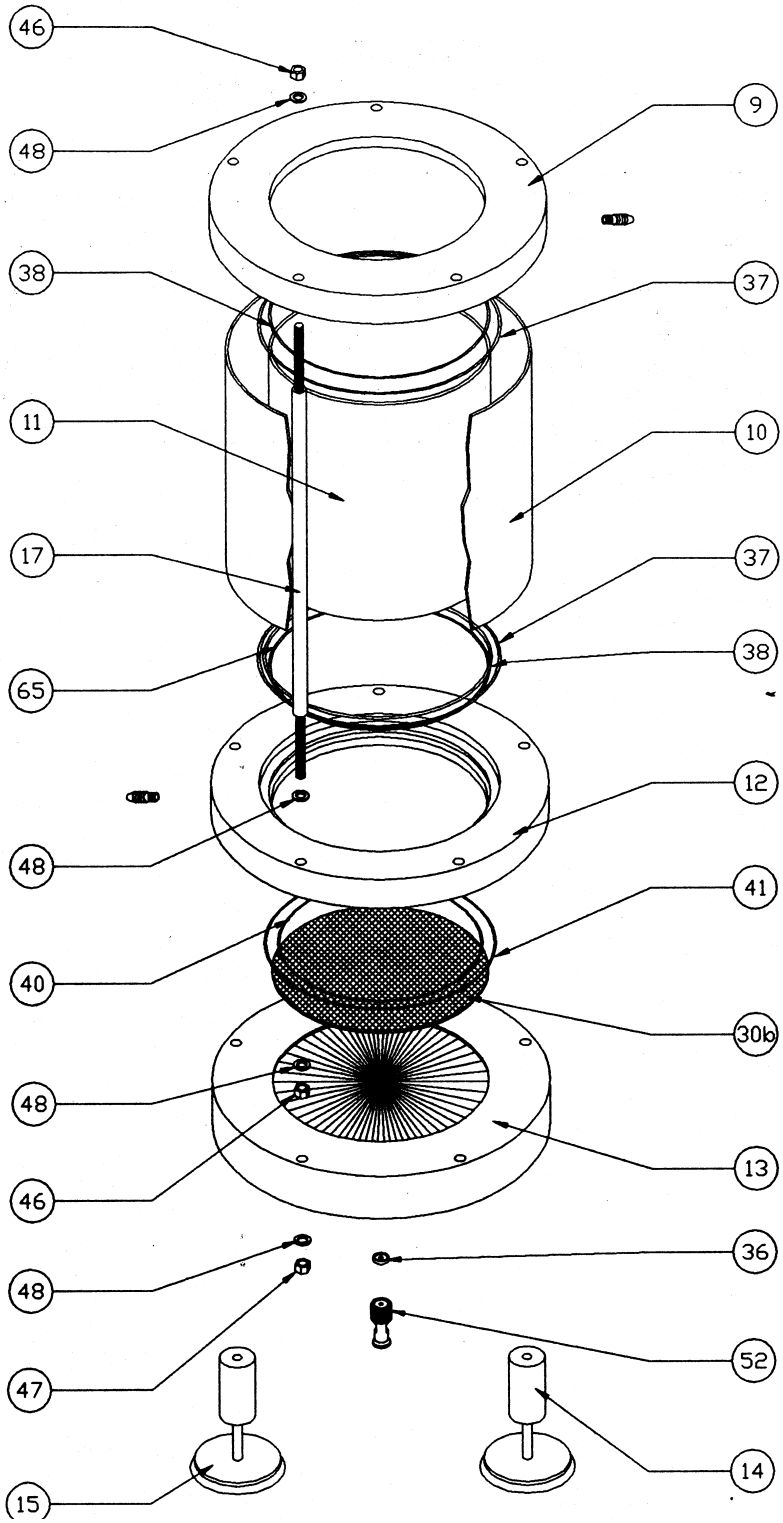

Revision 2.0
1/1/02

1415 Hyde Park Avenue
Boston, MA 02136-2699 USA
(617) 326-0444 phone, (617) 326-0443 fax

300mm Column Piston

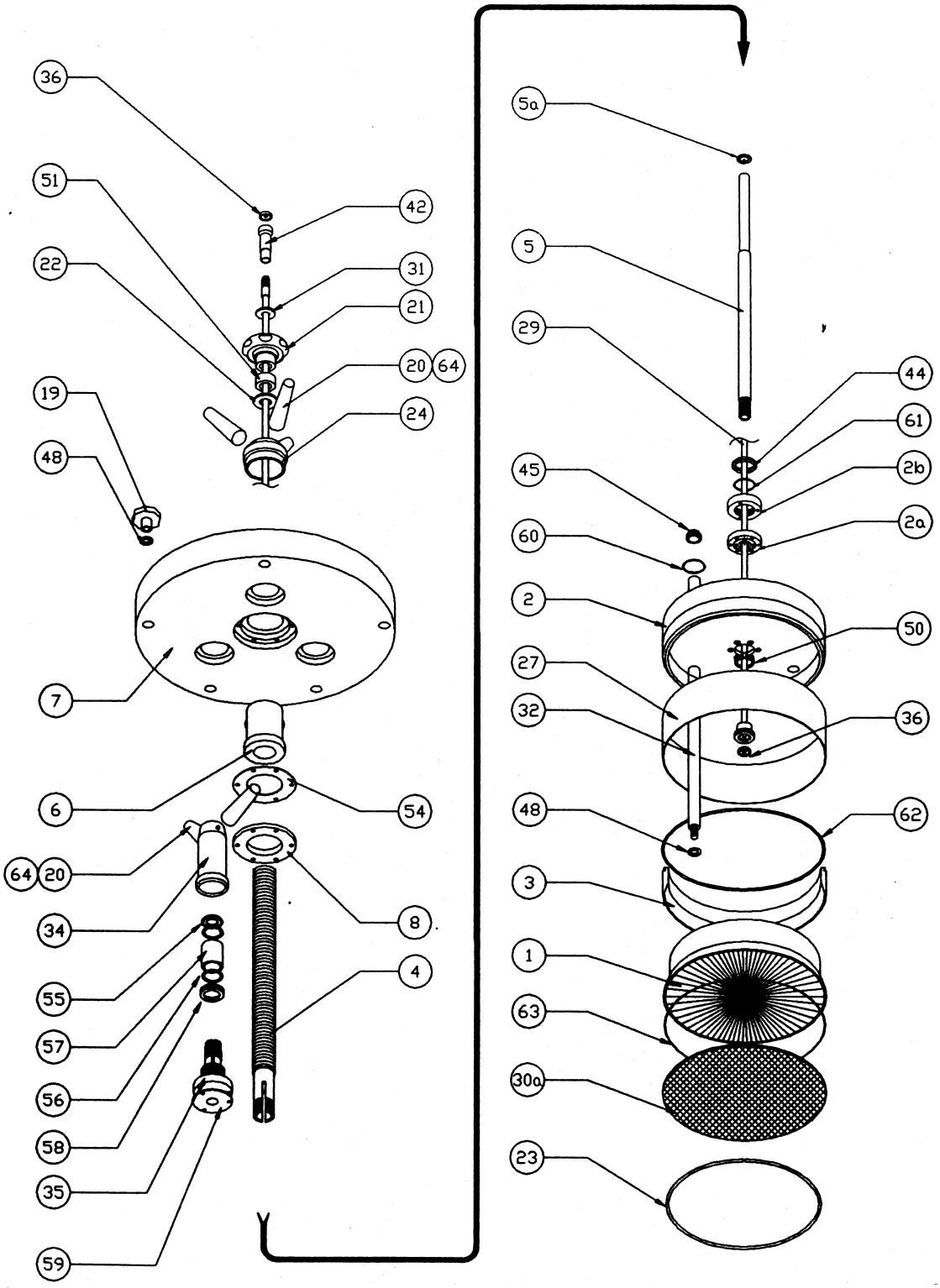

Revision 2.0
1/1/02

1415 Hyde Park Avenue
Boston, MA 02136-2699 USA
(617) 326-0444 phone, (617) 326-0443 fax

300mm Column Parts

Part No.	Ref .No.	Description	Quan.	Material
266300	1	Flow Distribution Cell	1	Grey PP
266301	2	Seal Screwing Plate	1	Grey PP
200002	2a	Screwing Nut	1	316L SS
263801	2b	Wiper Support ID 300/450	1	Grey PP
266023	3	Piston Seal	1	EPDM
263812	4	Central Screw ID 300/450	1	Grey PP
263802	5	Internal Central Screw ID 300/450	1	316L SS
266035	5a	Internal Central Screw Washer	1	316L SS
266306	6	Drive Bolt	1	316L SS
266307	7	Piston Support	1	Grey PP
262863	8	Holding Washer	1	Grey PP
266309	9	Top Tube Flange	1	Grey PP
266310	10	Jacket - H300mm	1	PMMA
266311	10	Jacket - H600mm	1	PMMA
266312	10	Jacket - H900mm	1	PMMA
263784	11	Glass Tube - H900mm	1	Borosilicate Glass
263788	11	Glass Tube - H300mm	1	Borosilicate Glass
263789	11	Glass Tube - H600mm	1	Borosilicate Glass
266313	12	Bottom Tube Flange	1	Grey PP
266314	13	Base Plate	1	Grey PP
266315	14	Stand Foot ID 300/450	3	Grey PP
266316	15	Foot ID 300/450	3	316L SS
266317	17	Tie Rod - H300 ID 300/450	3	316L SS
266318	17	Tie Rod - H600 ID 300/450	3	316L SS
266319	17	Tie Rod - H900 ID 300/450	3	316L SS
267252	19	Piston / Tie Nut ID 300/450	3	Bakelite
266320	20	Plastic Handle	3	Bakelite
266321	21	Seal Actuation Handle ID 90/180/300	1	Bakelite & SS
266322	22	Stop Washer	1	316L SS
266026	23	Frit Retaining Ring	1	Grey PP
266323	24	Bed Height Adjustment Handle Support	1	Black Delrin
266324	27	Seal Clip	1	Grey PP
266325	28	Clip Key	1	Black PP
266027	29	Inlet Tube	1	Grey PP
266029	30a	Top Frit	1	Porous PE

Revision 2.0
1/1/02

1415 Hyde Park Avenue
Boston, MA 02136-2699 USA
(617) 326-0444 phone, (617) 326-0443 fax

300mm Column Parts (con't)

Part No.	Ref .No.	Description	Qua-n.	Material
266028	30b	Bottom Frit	1	Porous PE
286101	31	Control Wheel Washer	1	Black Delrin
262629	32	Pressure Rod ID 300/450	3	Black Delrin
266327	34	Coupling Key	3	Nylon
266328	35	Coupling Support	3	Nylon
266329	36	ID 9.525 Sanitary Gasket ID 300/450	2	EPDM
266330	37	Jacket O-Ring	2	EPDM
266030	38	Glass Tube O-Rings	2	EPDM
266331	40	Bottom Frit O-Ring	1	EPDM
266332	41	Base Plate O-Ring	1	EPDM
266031	42	Inlet Sanitary Connection	1	Grey PP
266022	44	ID 40 Wiper	1	EPDM
266339	45	ID 20 Wiper ID 300/450	3	EPDM
266340	46	M12 Nut ID 300/450	10	SS
266341	47	M12 Blind Nut ID 300/450	5	SS
263791	48	M12 Washer	28	316L SS
266342	50	Gage	1	Grey PP
266343	51	Brace	1	Black Delrin
267251	52	ID 9.525 Outlet San. Conn. ID 300/450	1	Grey PP
266345	54	Slipping Washer ID 300/450	1	PTFE
266348	55	Bead Washer ID 300/450	3	SS
266349	56	ID 4mm Beads ID 300/450	132	304 SS
266303	57	Schuttle	3	SS
266350	58	Threaded Bead Washer ID 300/450	3	SS
266351	59	Coupling Washer ID 300/450	3	SS
266352	60	Pressure Tie Rod O-Ring ID 300/450	3	EPDM
200011	61	Internal Central Screw O-Ring	1	EPDM
266333	62	Flow Distribution Plate O-Ring	1	EPDM
266334	63	Top Frit O-Ring	1	EPDM
200039	64	Handle Axis	9	316L SS
263822	65	Glass Tube Cent. O-Ring	1	EPDM
270202	66	Leveling Eye	3	SS
270203	67	SS Ring	2	SS

1415 Hyde Park Avenue
Boston, MA 02136-2699 USA
(617) 326-0444 phone, (617) 326-0443 fax

450mm Column Body

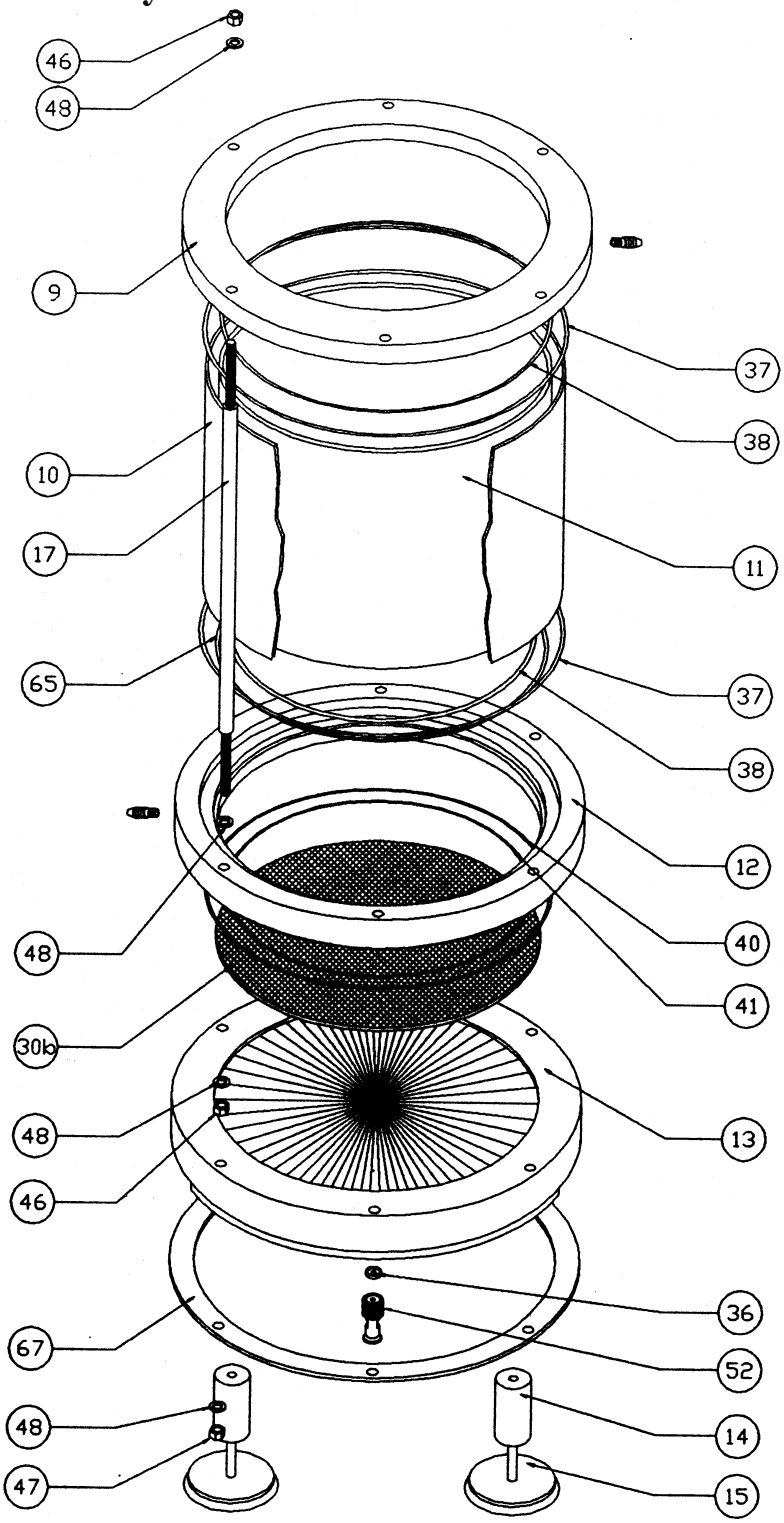

Revision 2.0
1/1/02

1415 Hyde Park Avenue
Boston, MA 02136-2699 USA
(617) 326-0444 phone, (617) 326-0443 fax

450mm Column Piston

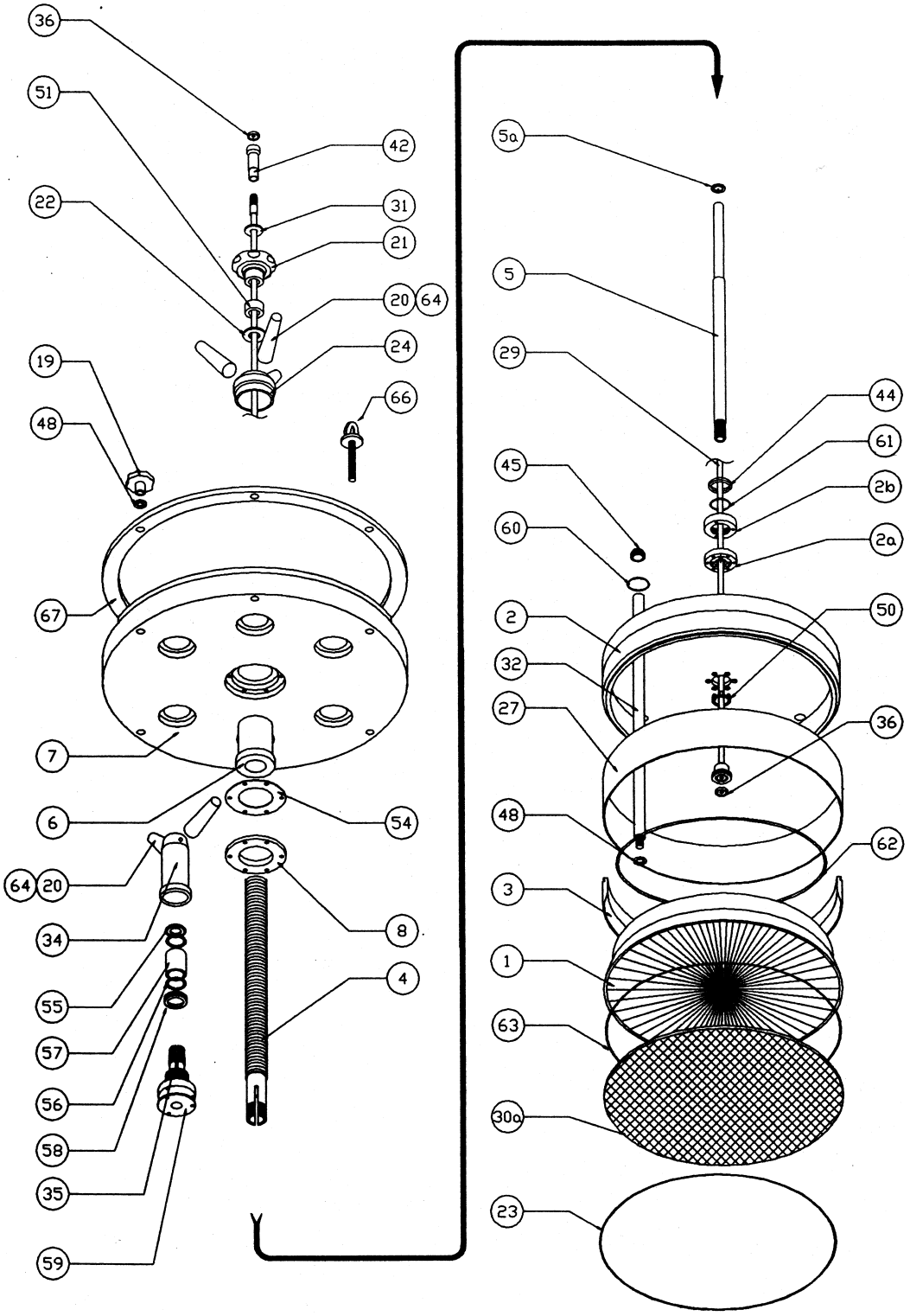

Revision 2.0
1/1/02

1415 Hyde Park Avenue
Boston, MA 02136-2699 USA
(617) 326-0444 phone, (617) 326-0443 fax

450mm Column Parts List

Part No.	Ref .No.	Description	Quan.	Material
200028	1	Flow Distribution Cell	1	Grey PP
200029	2	Seal Screwing Plate	1	Grey PP
200002	2a	Screwing Nut	1	316L SS
263801	2b	Wiper Support ID 300/450	1	Grey PP
266044	3	Piston Seal	1	EPDM
263812	4	Central Screw ID 300/450	1	Grey PP
263802	5	Internal Central Screw ID 300/450	1	316L SS
266035	5a	Internal Central Screw Washer	1	316L SS
266306	6	Drive Bolt	1	316L SS
2263743	7	Piston Support	1	Grey PP
262863	8	Holding Washer	1	Grey PP
263744	9	Top Tube Flange	1	Grey PP
200033	10	Jacket - H300mm	1	PMMA
200034	10	Jacket - H600mm	1	PMMA
200035	10	Jacket - H900mm	1	PMMA
263785	11	Glass Tube - H600mm	1	Borosilicate Glass
263786	11	Glass Tube - H900mm	1	Borosilicate Glass
263787	11	Glass Tube - H300mm	1	Borosilicate Glass
263745	12	Bottom Tube Flange	1	Grey PP
263746	13	Base Plate	1	Grey PP
266315	14	Stand Foot ID 300/450	3	Grey PP
266316	15	Foot ID 300/450	3	316L SS
266317	17	Tie Rod - H300 ID 300/450	6	316L SS
266318	17	Tie Rod - H600 ID 300/450	6	316L SS
266319	17	Tie Rod - H900 ID 300/450	6	316L SS
267252	19	Piston / Tie Nut ID 300/450	6	Bakelite
266320	20	Plastic Handle	15	Bakelite
263811	21	Seal Actuation Hand Wheel	1	Bakelite & SS
266322	22	Stop Washer	1	316L SS
266047	23	Frit Retaining Ring	1	Grey PP
266323	24	Bed Height Adjustment Handle Support	1	Black Delrin
200036	27	Seal Clip	1	Grey PP
266325	28	Clip Key	1	Black PP

Revision 2.0
1/1/02

1415 Hyde Park Avenue
Boston, MA 02136-2699 USA
(617) 326-0444 phone, (617) 326-0443 fax

450mm Column Parts List (con't)

Part No.	Ref .No.	Description	Qua-n.	Material
266048	29	Inlet Tube	1	Grey PP
266049	30a	Top Frit	1	Porous PE
266050	30b	Bottom Frit	1	Porous PE
286101	31	Control Wheel Washer	1	Black Delrin
262629	32	Pressure Rod ID 300/450	6	Black Delrin
266327	34	Coupling Key	6	Nylon
266328	35	Coupling Support	6	Nylon
266329	36	ID 9.525 Sanitary Gasket ID 300/450	2	EPDM
200037	37	Jacket O-Ring	2	EPDM
266051	38	Glass Tube O-Rings	2	EPDM
266335	40	Bottom Frit O-Ring	1	EPDM
266336	41	Base Plate O-Ring	1	EPDM
266031	42	Inlet Sanitary Connection	1	Grey PP
266022	44	ID 40 Wiper	1	EPDM
266339	45	ID 20 Wiper ID 300/450	6	EPDM
266340	46	M12 Nut ID 300/450	12	SS
266341	47	M12 Blind Nut ID 300/450	6	SS
263791	48	M12 Washer	36	316L SS
266342	50	Gage	1	Grey PP
266343	51	Brace	1	Black Delrin
267251	52	ID 9.525 Outlet San. Conn. ID 300/450	1	Grey PP
266345	54	Slipping Washer ID 300/450	1	PTFE
266348	55	Bead Washer ID 300/450	6	SS
266349	56	ID 4mm Beads ID 300/450	132	304 SS
266303	57	Schuttle	6	SS
266350	58	Threaded Bead Washer ID 300/450	6	SS
266351	59	Coupling Washer ID 300/450	6	SS
266352	60	Pressure Tie Rod O-Ring ID 300/450	6	EPDM
200011	61	Internal Central Screw O-Ring	1	EPDM
200041	62	Flow Distribution Plate O-Ring	1	EPDM
266338	63	Top Frit O-Ring	1	EPDM
200039	64	Handle Axis	15	316L SS
263823	65	Glass Tube Cent. O-Ring	1	EPDM

1415 Hyde Park Avenue
Boston, MA 02136-2699 USA
(617) 326-0444 phone, (617) 326-0443 fax

Spare Parts & Accessories

267255	90mm Frit Kit consisting of:		
Part No.	Description	Quan.	Material
266018	Top Frit	5	Pourous PE
266019	Bottom Frit	5	Pourous PE
266020	Base Plate O-Ring	1	EPDM
200013	Top Frit O-Ring	1	EPDM
266325	Clip Key	1	Grey PP
266016	Frit Retaining Ring	1	Grey PP
200009	Glass Tube & Bottom O-Ring	1	EPDM

267256	180mm Frit Kit consisting of:		
Part No.	Description	Quan.	Material
266039	Top Frit	5	Pourous PE
266040	Bottom Frit	5	Pourous PE
200024	Base Plate O-Ring	1	EPDM
200027	Top Frit O-Ring	1	EPDM
266325	Clip Key	1	Grey PP
266037	Frit Retaining Ring	1	Grey PP
266041	Glass Tube & Bottom O-Ring	1	EPDM

267257	300mm Frit Kit consisting of:		
Part No.	Description	Quan.	Material
266029	Top Frit	5	Pourous PE
266028	Bottom Frit	5	Pourous PE
266332	Base Plate O-Ring	1	EPDM
266334	Top Frit O-Ring	1	EPDM
266325	Clip Key	1	Grey PP
266026	Frit Retaining Ring	1	Grey PP
266331	Glass Tube & Bottom O-Ring	1	EPDM

1415 Hyde Park Avenue
Boston, MA 02136-2699 USA
(617) 326-0444 phone, (617) 326-0443 fax

Spare Parts & Accessories (con't)

267258	450mm Frit Kit consisting of:		
Part No.	Description	Quan.	Material
266049	Top Frit	5	Pourous PE
266050	Bottom Frit	5	Pourous PE
266336	Base Plate O-Ring	1	EPDM
266338	Top Frit O-Ring	1	EPDM
266325	Clip Key	1	Grey PP
266047	Frit Retaining Ring	1	Grey PP
266335	Glass Tube & Bottom O-Ring	1	EPDM

267253	90/180mm Fitting Kit consisting of:		
Part No.	Description	Quan.	Material
263733	Jacket ID 6 Hose Barb Connection	2	Grey PP
200007	ID 6 Sanitary Gasket	4	EPDM
273420	25 Sanitary Collar	2	Plastic
274002	Adaptor Sanitary Flange / ID 6 Hose Barb Fitting	2	EPDM

267254	300/450mm Fitting Kit consisting of:		
Part No.	Description	Quan.	Material
263733	Jacket ID 6 Hose Barb Connection	2	Grey PP
266329	ID 9.525 Sanitary Gasket	4	EPDM
273420	25 Sanitary Collar	2	Plastic
263790	Adaptor Sanitary Flange / ID 9.525 Hose Barb Fitting	2	EPDM

OTHER ACCESSORIES			
PART NUMBER	COLUMN SIZE	DESCRIPTION	NOTE
263731	ID 300	Adjustable Column Stabilization Assembly	None
263732	ID 450	Adjustable Column Stabilization Assembly	None
263767	ID 90	Accessory Kit	See Packing Content for List of Parts
263768	ID 180	Accessory Kit	See Packing Content for List of Parts
263623	ID 300	Accessory Kit	See Packing Content for List of Parts
266043	ID 450	Accessory Kit	See Packing Content for List of Parts

1415 Hyde Park Avenue
Boston, MA 02136-2699 USA
(617) 326-0444 phone, (617) 326-0443 fax

Packing Content:

90 and 180 Diameter Columns:

*** 1 Complete Column**

*** 1 Accessory Kit (P/N 263767 for ID 90 and P/N 263768 for ID 180) including the following:**

- 1 set of 5 top porous frits
- 1 set of 5 bottom porous frits
- 1 frit clip
- 1 set of two o-rings for tube flange
- 2 top frit o-rings
- 4 sanitary gaskets ID 6 mm
- 2 sanitary collars DN 25
- 1 set of four washers
- 1 set of four nuts
- 2 hose barb connections ID 6 mm
- 2 adapters sanitary flange / hose barb fitting
- 1 clip dismounting device
- 1 bubble level
- 1 column manual
- 1 wrench of 13 mm

300 and 450 Diameter Columns:

*** 1 Complete Column**

*** 1 Accessory Kit (P/N 263623 for ID 300 and P/N 266043 for ID 450) including the following:**

- 1 top porous frit
- 1 bottom porous frit
- 1 frit clip
- 1 set of two o-rings for tube flange
- 2 top frit o-rings
- 4 sanitary gaskets ID 9.525 mm
- 2 sanitary collars DN 25
- 1 set of four washers
- 1 set of four nuts
- 2 hose barb connections ID 6 mm
- 2 adapters sanitary flange / hose barb fitting
- 1 clip dismounting device
- 1 bubble level
- 1 column manual
- 1 wrench of 13 mm

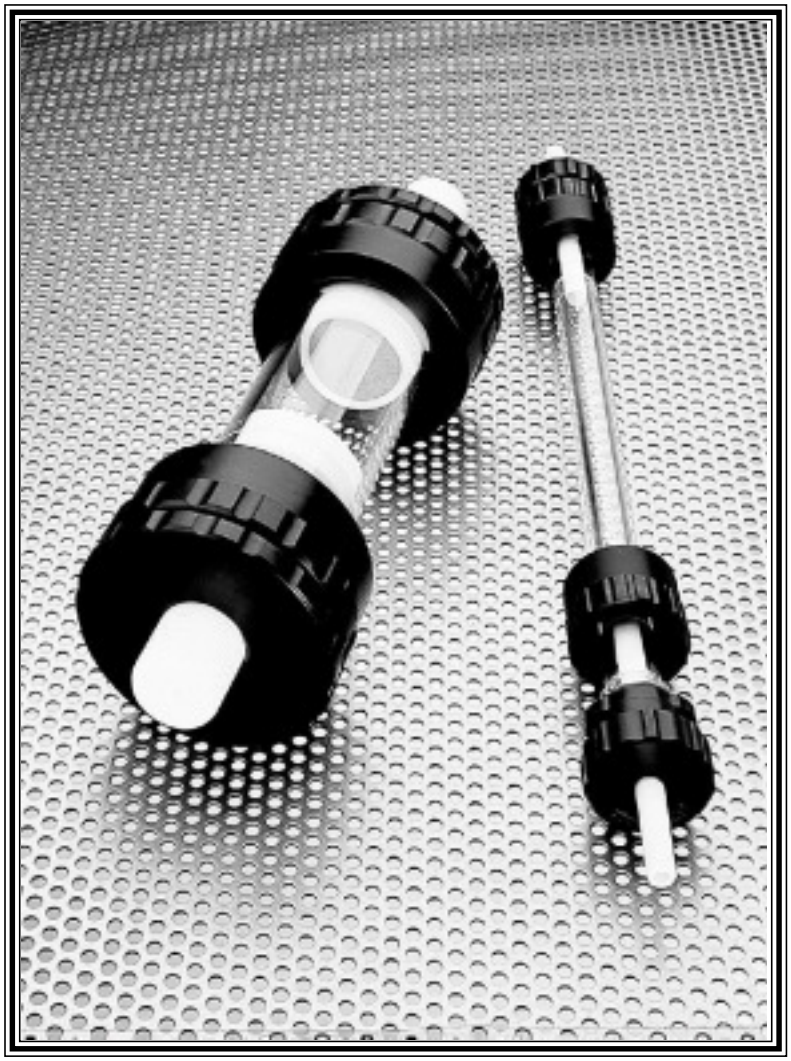

essentialLife Solutions

Econoline® Column Manual

1415 Hyde Park Avenue, Boston, Massachusetts, 02136-2699, United States of America
(617) 326-0444 phone, (617) 326-0443 fax

1415 Hyde Park Avenue
Boston, MA 02136-2699 USA
(617) 326-0444 phone, (617) 326-0443 fax

INTRODUCTION

ECONOLINE® is a multipurpose column for almost all types of liquid chromatography application. Adjustable length plungers at both ends and a totally inert triple chevron sealing system support the complete range of applications from classical normal phase and reversed phase chromatography right through to biochromatography.

The Quick-Lock™ connection system makes it possible to open and reseal the column simply and quickly.
ECONOLINE® glass columns are available in two versions. The solvent resistant (SR) version is equipped with the triple chevron sealing system, whereas the aqueous buffer (AB) version is provided with ethylene polymer elastomer sealing rings, which ensure that the column will work perfectly even at low temperatures.

EXTENT OF SUPPLY AND SPECIFICATION

Number	Name	Material
1	column body	borosilicate glass
2	variable pistons	Teflon (SR) or polyethylene (AB)
2	bayonet system locks	Delrin
2	frits (pressed into column piston body)	glass or steel (SR); polyethylene (AB)
2 x 2	locking rings 1/16“ + 1/8“	Tefzel
2 x 2	fixing screws 1/16“ + 1/8“	Delrin
2	coupling units 1/4“-28–>M6	Tefzel
2 x 2	connecting tubes 1/16“ + 1/8“	Tefzel
1	frit ejector	steel / Delrin

RECOMMENDED ACCESSORIES

Number	Name	Material	P/N
1 pk./10 pcs.	stoppers	Tefzel	KP311
1	coupling unit	Tefzel	KP630

1415 Hyde Park Avenue
Boston, MA 02136-2699 USA
(617) 326-0444 phone, (617) 326-0443 fax

CONTENTS

	DETAILED DIAGRAM OF THE ECONOLINE® COLUMN	Page 04
1.	INSERTION/REMOVAL OF THE QUICK-LOCK BAYONET SYSTEM	Page 05
2.	FRIT REPLACEMENT	Page 05
3.	INSTALLATION OF Essential Life Solutions MPLC FITTINGS	Page 06
4.	ELIMINATION OF DEAD VOLUME	Page 06
5.	OPERATION OF THE COLUMN	Page 07
6.	SOLVENT RESISTANCE	Page 08
7.	PACKING INSTRUCTIONS	Page 09
8.	CLEANING METHODS FOR PACKED COLUMNS	Page 12
9.	TROUBLESHOOTING	Page 14

The general conditions and the Essential Life Solutions Ltd warranty conditions apply in the version that is valid in each case. All information contained within this manual is without obligation, as it is subject to technical changes resulting in product improvement.

essentialLife Solutions

1415 Hyde Park Avenue
Boston, MA 02136-2699 USA
(617) 326-0444 phone, (617) 326-0443 fax

ECONOLINE COLUMN

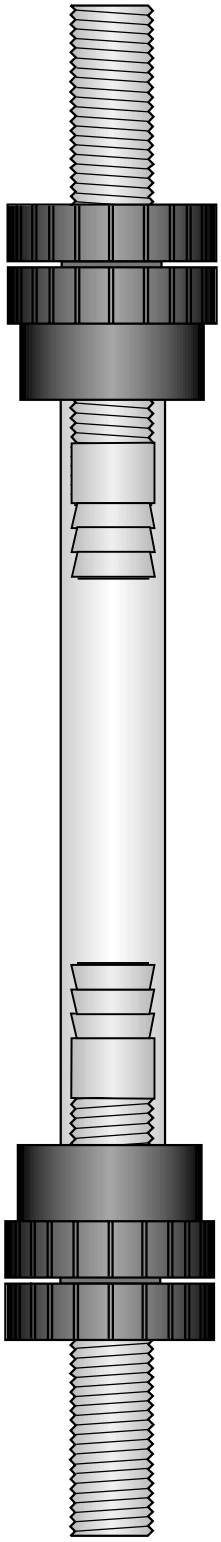

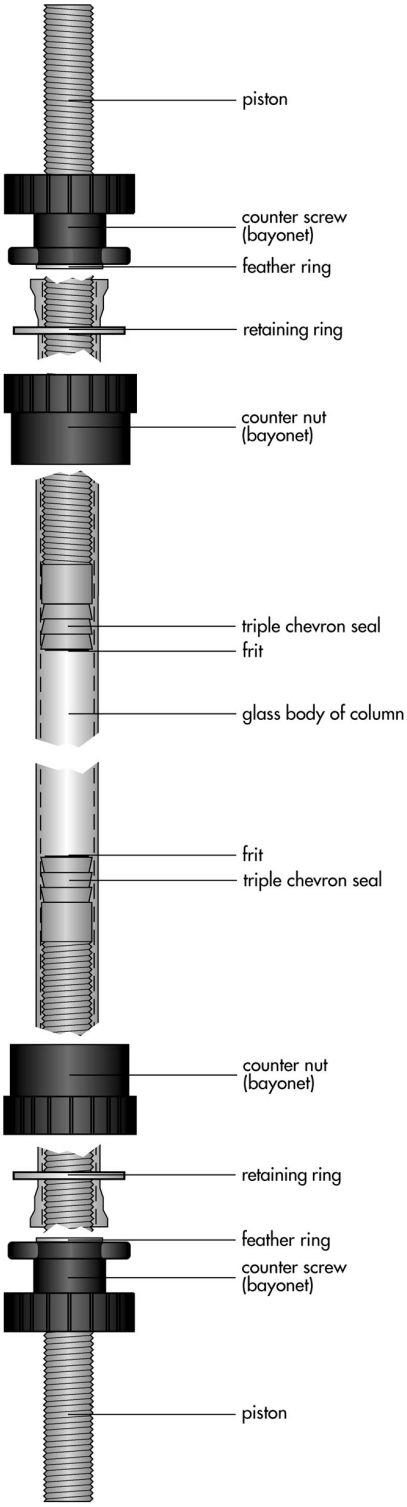

Revision 2.0
1/1/02

1415 Hyde Park Avenue
Boston, MA 02136-2699 USA
(617) 326-0444 phone, (617) 326-0443 fax

1. REMOVAL/INSERTION OF THE PISTON

Opening the lock
To open the lock, the counter nut and counter screw are pressed gently towards each other and the screw is turned a quarter turn anticlockwise. This frees the piston, so that it and the counter screw can be removed as a single piece from the column.

Resealing the column
Gently insert the piston, with the counter screw attached, into the column body, ensuring that it goes in straight and not at an angle. Bring the counter screw and the counter nut into position by turning them in such a way that the stopper of the bayonet lock fits into the opening of the the counter nut. The column is sealed by turning the counter screw a quarter turn clockwise. The bayonet lock will engage audibly.

PLEASE NOTE: When inserting the piston, it is absolutely essential that it goes straight in and not at an angle. The inner glass surface and the seals must be clean, and the seals should be moistened with solvent Both the O-rings on the AB version and the Teflon triple chevron seals on the SR version can be damaged by foreign particles or by incorrect insertion, rendering the seal useless.
The column can only be used with correctly locked end fittings, otherwise the pistons will be forced out of the column by the pressure inside. Please make sure you hear the bayonet lock click, which means that it is locked correctly.

2. FRIT REPLACEMENT

1. ***Eject the old frit with the frit ejector supplied.***

2. ***Insertion of new frit: the Teflon piston end can be protected by heating it (to a maximum of 121°C) before the new frit is pressed into position. Before the piston can be inserted into the column, it must be cooled back down to the temperature of its surroundings.***

1415 Hyde Park Avenue
Boston, MA 02136-2699 USA
(617) 326-0444 phone, (617) 326-0443 fax

3. ASSEMBLY OF Essential Life Solutions Ltd. MPLC-FITTINGS

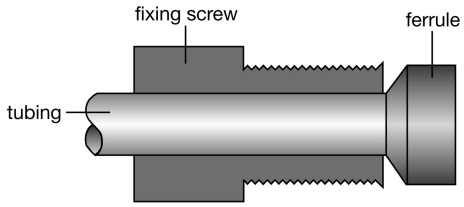

These assembly instructions are for tubing with an outer diameter of 1.6mm or 3.2 mm.

1. ***The end of the tubing is cut square with a knife or a tubing cutter.***

> **PLEASE NOTE: Do not cut with scissors, as the tubing will be squashed. It is important to cut the tubing at 90°, as the cut edge forms part of the sealing area.**

2. ***The fixing screw is pushed onto the tubing.***
3. ***The ferrule is pushed onto the tubing with the conical end towards the fixing screw. If the tubing cannot be inserted into the ferrule, the conical end can be widened slightly with a suitable instrument (e.g. a scriber).***
4. ***The fitting can now be inserted into the desired position. The screws should be tightened until the pressure can be felt, after which they should be tightened by another half turn.***

> **PLEASE NOTE: When the fittings are screwed into the Teflon thread, care should be taken to screw them in straight and fasten them carefully, to avoid damaging the Teflon thread.**

4. ELIMINATION OF DEAD VOLUME

Dead volume which occurs at the column inlet can be remedied simply without needing to open the column:

1. ***Turn off the pump.***
2. ***Turn the column lock anticlockwise.***

> **PLEASE NOTE: The piston should only touch the surface of the stationary phase. If it is pressed into the stationary phase, the packing may be destroyed.**

1415 Hyde Park Avenue
Boston, MA 02136-2699 USA
(617) 326-0444 phone, (617) 326-0443 fax

5. OPERATION OF THE COLUMN

Putting the column into operation

The pistons, frits and glass body must be cleaned thoroughly before the column is used for the first time. In some cases it may be worth dismantling the column and washing the parts in a sonic bath for a few minutes. After cleaning, all parts must be rinsed in double-distilled water and assembled as described in the second part of point 1 (page 5). Care must be taken that the piston is straight when inserted into the column body, because if it is inserted at an angle, the seal might be damaged.

To operate the column, it must be attached to an appropriate chromatography system or pump using the fittings supplied. Take care when selecting the tubing: tubing diameter must be appropriate to the flow rate to be applied, and the tubing itself must not react with the solvent in question. Should the column bed shrink during use, dead volume can easily be eliminated by moving the variable piston downwards.

PLEASE NOTE: only use degassed and pre-filtered solvents. Particles in the solvent may clog the frits or damage the column packing. Make sure that the particle size of the chromatography material in question is considerably greater than the porosity of the frits!

Hints for operation

1. ***Storage of the packed column: open the sealing stoppers by one complete turn in order to compensate for temperature-related changes in pressure.***

IMPORTANT: Protect moistened columns from intense heat and direct sunlight. The heat induces evaporation of highly volatile solvents, and the resulting pressure can crack the column.

2. ***We recommend eluting the column from bottom to top so that any air present can escape more quickly. As a result, the column is conditioned more quickly, so less solvent is necessary.***
3. ***Before sample application, please ensure that no dead volume has occurred at the column inlet during the conditioning phase. (For removal of dead volume, see page 6).***

1415 Hyde Park Avenue
Boston, MA 02136-2699 USA
(617) 326-0444 phone, (617) 326-0443 fax

6. SOLVENT RESISTANCE

For the storage of packed columns, we recommend 20% ethanol in H_2O, possibly buffered neutrally with up to 1 M NaCl, or a neutral buffer with 0.03% sodium azide. Normal and reversed phase columns should be stored in the solution they are used with, but with a minimum proportion of 10% organic solvent. All solvents used should be filtered through at least 0.45µm, or preferably through 0.22µm filters.

In general the following solvents and additives can be used. However, we do not recommend using any of them for longer periods of time or for storage. For further information please contact Essential Life Solutions Ltd.

W **Resistant to all common organic solvents such as:**
ethanol, methanol, propanol, isopropanol, acetonitrile
U ***Please note that the AB version is only resistant to organic solvents to a limited extent***

W **Resistant to all common aqueous buffers**

W **Salts in aqueous solutions such as: NaCl, $(NH_4)_2SO_4$, $MgCl_2$, $CaCl_2$, etc.**

W **pH 1-14**

W **2 M NaOH**

W **1 M HCl**

W **75% acetic acid**

W **Detergents ($\leq$ 2%) such as SDS, Triton, etc.**

W **6 M guanidinium-HCl, 8 M urea**

W **Working temperature range:**
with Teflon piston / triple chevron sealing system:
16-40° C (SR version)
with polyethylene piston / O-Ring-seals:
4-40° C (AB version)

1415 Hyde Park Avenue
Boston, MA 02136-2699 USA
(617) 326-0444 phone, (617) 326-0443 fax

7. PACKING INSTRUCTIONS

This packing method is a general recommendation, which usually gives good results in terms of reproducibility and resolution. Best results can be achieved by using a filling tube when packing the column. If you only require a short bed length or relatively low packing quality, the column can also be packed directly and the slurry can also be topped up during packing if necessary. In individual cases, we advise optimising the methods depending on the specific media or application in question.

Assembling the packing device

The glass column body is sealed at one end with the piston. The filling tube is attached to the column funnel with the coupling unit. Care should be taken to position the O-rings and the frits correctly. The packing device must be screwed on tightly, to prevent foreign bodies from coming between the seals and the glass column body or getting caught inside.

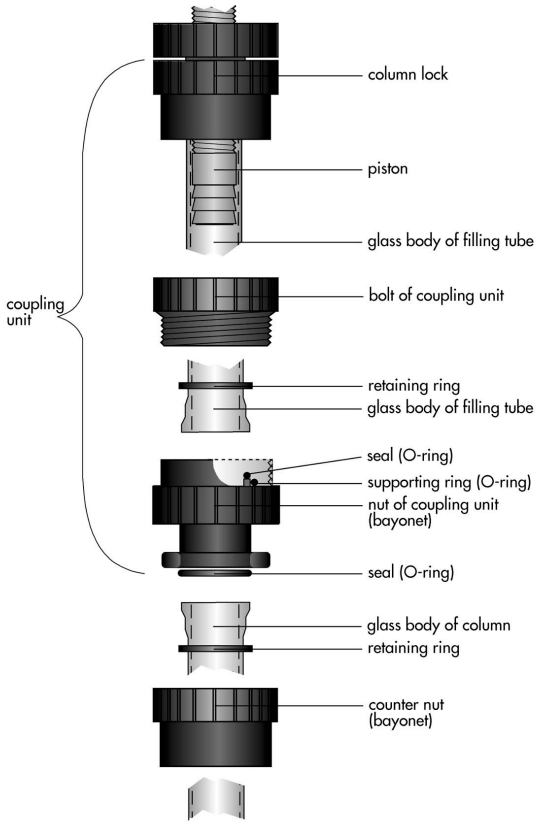

Producing the slurry

A suitable solvent or buffer is added to the appropriate amount of packing material until it reaches the total volume of the packing device or the column (see instructions on packing material). The slurry is gently shaken until it has a uniform consistency (never use a magnetic stirrer) and degassed thoroughly just before packing.

1415 Hyde Park Avenue
Boston, MA 02136-2699 USA
(617) 326-0444 phone, (617) 326-0443 fax

7. PACKING INSTRUCTIONS

Safety tip

Glass columns must never be packed under gas pressure without the appropriate protection equipment. You should always keep within the stated pressure limits for columns and related equipment. Appropriate clothing for the laboratory and safety glasses are essential.

PLEASE NOTE: A glass column should never be used under gas pressure. Even small stresses in the body of the column are sufficient to cause the column to explode, thus freeing the expansion energy of the gas and causing the shards of glass to act like projectiles. If the glass body shatters under the pressure of a liquid, on the other hand, there is no danger, since liquids are much less compressible and have virtually no expansion energy.

Packing the column with rigid media

Introduce a few ml of solvent or buffer (see instructions on packing material) into the packing device, so that the lower frit is moistened and free from air bubbles. Next the slurry is shaken carefully until it has a uniform consistency and quickly poured into the packing device without introducing any air bubbles. The slurry container must not have any air bubbles at all in it. If necessary, it can be topped up with solvent. The packing device is then sealed and packed as quickly as possible using a pump: this means that the flow rate should be set at the pressure limit of the column, so if necessary packing is carried out at the pump's maximum flow rate. A narrow PEEK capillary at the column outlet may improve packing quality, as it will act like a back-pressure regulator and prevent the slurry entering the column too quickly at first. Pumping must continue at least until a constant pressure is reached. The flow rate during packing should always be considerably higher (>20%) than the flow rate needed for later use. After packing, the filling tube is unscrewed. Care must be taken when opening the column outlet so that any remaining pressure is released completely.

The piston is introduced carefully, without allowing any particles to get between the glass and the piston seal. The column is now re-attached to the pump, the pump is started at low pressure and the flow gradually increased to the pressure limit of the column. At this point dead volume may occur between the variable piston and the column bed, which can be removed by moving the variable piston towards the column bed. For this, the column must not be under pressure, i.e. the pump must be turned off and the column inlet opened. Next the column is conditioned with the relevant eluents and is ready to be used.

1415 Hyde Park Avenue
Boston, MA 02136-2699 USA
(617) 326-0444 phone, (617) 326-0443 fax

7. PACKING INSTRUCTIONS

Packing the column with soft gels

Only degassed and filtered solvents or buffers may be used when packing chromatography columns.
The lower frit is dampened and covered with approx. 1cm solvent. Next the slurry is introduced carefully and quickly, ensuring that no air bubbles occur. The column outlet should be open while the column is being filled; the solvent can also be sucked from the column outlet with a peristaltic pump at the same time. When the slurry has all been poured in, the gel must be allowed to settle and the solvent sink to approx. 0.5 – 1cm above the packing level in the gel bed. The gel bed must not be allowed to run dry. The column outlet is closed or the peristaltic pump stopped. Next the variable piston is inserted, without allowing particles to come between the seal and the column body. By turning the lock slowly, the piston can be moved towards the gel bed. At the same time, all the air above the gel bed should be forced out of the column inlet. It is essential that the gel bed is not compressed when moving the piston towards it. Now the column can be equilibrated with the appropriate buffer or solvent.
Dead volume can occur between the gel bed and the piston during normal use, but this can be removed by moving the piston inwards.

Quality control

We recommend that you determine plate count and peak symmetry with a suitable (non-adsorbent) test substance after packing the column. By repeating this test frequently, the quality and durability of the packing material can be recorded efficiently.

Amount of theoretical plates (N):

$N = 5.54 \times (T_1 / W_{1/2})$	T_1:	***retention time (sec)***
	$W_{1/2}$:	***peak width (sec) at half peak height***
$HETP = L / N$	L:	***column length in mm***

Peak symmetry (S):

$S = W_{1/2,r} / W$	$W_{1/2,r}$:	***peak width to the right of the peak median***
	$W_{1/2,l}$:	***peak width to the left of the peak median***

1415 Hyde Park Avenue
Boston, MA 02136-2699 USA
(617) 326-0444 phone, (617) 326-0443 fax

8. CLEANING INSTRUCTIONS FOR PACKED COLUMNS (CIP)

The cleaning of a chromatography column involves the following three stages: regeneration of the column packing, sterilisation and depyrogenation.

Regeneration removes chemical and organic contamination that becomes non-specifically attached to the chromatography material, considerably reducing the capacity and resolution of the column. This kind of contamination is usually caused by lipids and pyrogens, protein aggregates, pigments, polyphenols and metal complexes.

Sterilisation is the removal and/or denaturing of micro-organisms and spores, which could contaminate the purified product, by chemical treatment. The most frequently used sterilisation method is treatment with sodium hydroxide, acetic acid or ethanol solutions containing sodium hydroxide or acetic acid.

Depyrogenation includes the breaking-down of endotoxins that have become attached to the chromatography material or the column hardware (frits, tubing etc.) and can soil the target compounds in question by being washed gradually through the column. Often the methods used to sterilise equipment will also break down pyrogens.

Chromatography columns can be purified and sterilised by taking the following steps:

The column is dismantled and the individual parts (column body, pistons, end fittings, frits) are washed in a dilute solution of caustic soda or sodium hypochloride (0.5 N NaOH or dilute NaOCl); the frits should be left in the same solution for 30-60 minutes. Before the column is re-assembled, all parts should be washed in a sterile, pyrogen-free solution.

The column must be packed in a sterile environment. All solvents and solutions used for the column must be sterile and pyrogen-free. We recommend in-line filtration through a 0.22 µm filter.

PLEASE NOTE: Check carefully that all moistened parts of the column are stable with all reagents used. If in doubt, contact Essential Life.

1415 Hyde Park Avenue
Boston, MA 02136-2699 USA
(617) 326-0444 phone, (617) 326-0443 fax

8. CLEANING INSTRUCTIONS FOR PACKED COLUMNS (CIP)

There is a range of cleaning methods, according to the nature of the substance to be removed. Please refer to the instructions given for the column packing in question!

Treatment	Contamination	Sterili-zation	Depyroge-nation
1-2 M NaCl	Highly charged molecules	Ineffective	Ineffective
Buffer pH 3-5	Highly charged molecules	Ineffective	Ineffective
Treatment with pronase at	Hydrolysis of adsorbed proteins	Ineffective	Ineffective
a neutral pH, calcium ions			
Treatment with pepsin,	Hydrolysis of adsorbed proteins	Ineffective	Ineffective
pH 1.5-2			
Non-ionic detergents	Removal of hydrophobic proteins and	Ineffective	Ineffective
(e.g. Triton X-100, Tween 80)	lipidis		
Cationic detergents pH 9-11	Removal of hydrophobic proteins and	Ineffective	Partial
	lipidis		
Non-ionic detergents pH 3	Removal of hydrophobic proteins and		
(acetic acid)	lipidis	Ineffective	Partial
Urea 6-8 M	Removal of protein aggregates	Ineffective	Unknown
1-100 mM EDTA in neutral	Removal of metal complexes	Ineffective	Ineffective
or slightly acidic solution			
2-3 M NaCl in	Removal of various small, charged molecules	Ineffective	Effective
0.1-1 M HCl	and pigments		
0.1-1 M NaOH	In particular the removal of bonded	Effective	Effective
	hydrophobic proteins and lipo-polysaccharides		
0.5-1 M acetic acid in	Removal of lipids, pigments, lipo-poly-		
60% ethanol	saccharides and other lipophilic substances	Very effective	Effective
1500 ppm peracetic acid in	Removal/denaturing of spores, viruses		
0.5 M sodium acetate, pH 5	and bacteria	Very effective	Unknown
50-80% acetic add	Dissolving and removal of	Unknown	Unknown
	precipitated proteins		
40-60% ethanol	Removal of various proteins and lipids	Unknown	Unknown
Isopropanol-gradient	Removal of non polar lipids	Ineffective	Unknown
up to 100% in water			
0.1-1 M mineral or	Removal of various charged molecules	Unknown	Unknown
organic acids	and hydrolysis of bonded substances		
0.1 M - 1 M HCl	Removal of various charged molecules	Unknown	Effective
in 60% ethanol	and lipids		

1415 Hyde Park Avenue
Boston, MA 02136-2699 USA
(617) 326-0444 phone, (617) 326-0443 fax

9. TROUBLESHOOTING

Problem	Cause	Remedy
1. Peak shape of eluted substances deteriorates	1. Dead volume at column inlet 2. Inlet frit partially blocked 3. Outlet frit partially blocked 4. Separation efficiency of stationary phase affected by contamination 5. Stationary phase damaged mechanically	1. see point 4 on page 6: elimination of dead volume 2. Remove and dismantle piston, replace frit, reassemble and re-insert piston. The column will need to be reconditioned. 3. Remove piston, replace frit, reassemble and re-insert piston. The column will need to be reconditioned. 4. Repack column 5. Repack column
2. "Air" in the column	Gas evolution or solvent evaporation during storage	Recondition column
3. Abnormal pressure increase during operation	1. Incorrect valve position 2. Blocked frit 3. Fittings tightened too much	1. Check valve position 2. see above, 1. 2. 3. Replace fittings and ferrules, re-cut the end of the tubing.
4. Pressure drop during operation	1. Leak in tubing or fitting between pump and column 2. Solvent supply has run out	1. Check tubing and connections 2. Refill solvent
5. Solvents leaking from column	See diagram on following page	See diagram on following page

1415 Hyde Park Avenue
Boston, MA 02136-2699 USA
(617) 326-0444 phone, (617) 326-0443 fax

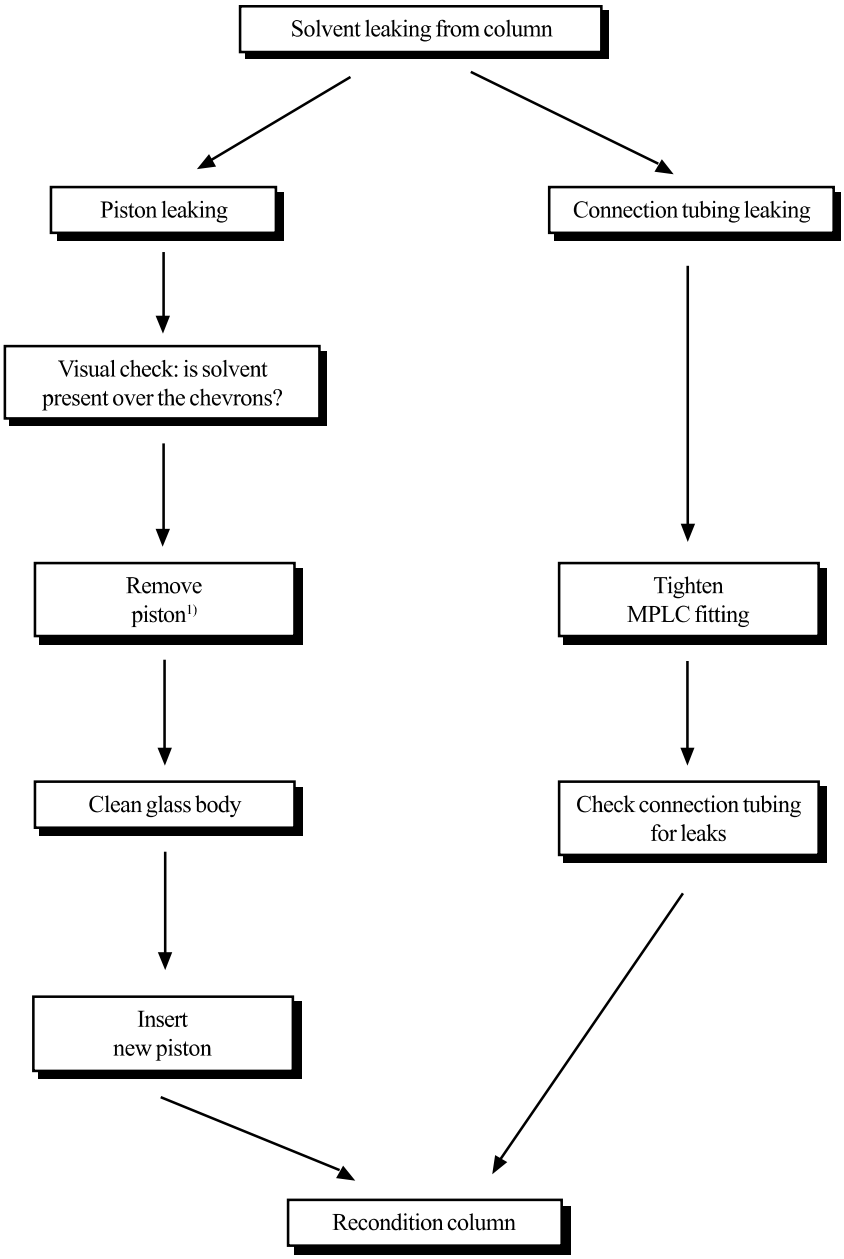

[1)] CAUTION: Open connection tubing first to prevent cracking of the packing due to vacuum originated by removal of the piston.

ASSEMBLAGE of IK COLUMNS

1. Install the Inlet Port into the Lid.

   - Make sure that the Inlet Port has 2 O-rings: a small O-ring #011 (5/16 x 7/16) for connecting to the standard Female Quick-Disconnect ports. and a large #116 O-ring (3/4” x 15/16”), as shown.

   - Do not use wrench to tighten the Nut (3/4”-10) on the outside surface of the Lid

2. Install Central Mesh Screw through the Nylon mesh O-ring #108 (1/4 x 7/16) and the Lid as shown.

   - Do not over-tighten the wing-nut (1/4-28).

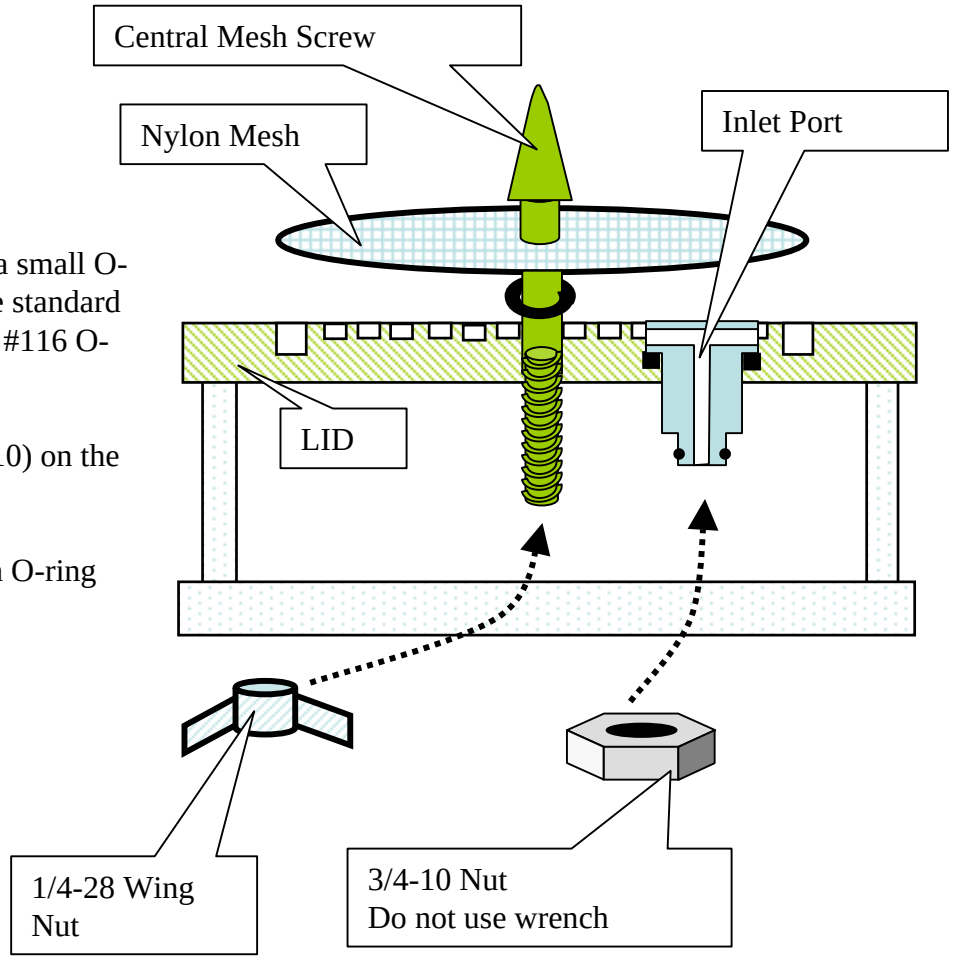

ASSEMBLAGE of IK COLUMNS

3. Press the Mesh into the distribution groove with an aid of a short piece of 1/8” (3-mm) Tygon or Silicon tubing (not supplied) while the Square O-ring is pressed into the O-ring groove. The tubing helps to prevent over-stretching of the Mesh by the O-ring.

4. Similarly, press down the O-ring over mesh at the opposite corner of the Lid, and then at about 90 degrees. Subsequently, work in the O-ring throughout the entire Lid perimeter. Make sure that the Mesh is securely set under the O-ring throughout the perimeter as well as under the Central Mesh Screw.

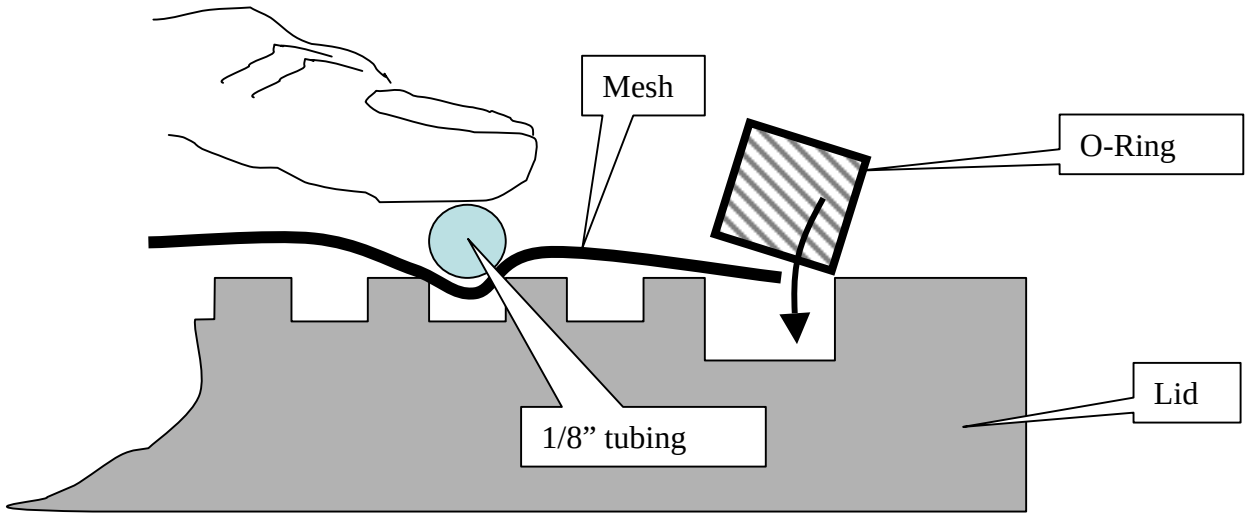

NOTES:

- The installed mesh does not have to be wrinkle-free for all practical purposes.
- Replacement mesh and the O-rings can be ordered from Essential Life Solutions. However in emergency situations, Nylon mesh of any opening size can be acquired from any of many vendors and can be cut in-house to fit to the outer diameter of the O-ring groove on the Lid.
- Similarly, use a slot on the column Stand to flat-cut a new O-ring from the 1/4”square cord stock. Glue the ends of the cord

ASSEMBLAGE of IK COLUMNS

5. Into the Lower Lid, install (3/8”-16) threaded studs using 2 hex nuts (A, B).
6. Place the Barrel on the Lower Lid so that the Packing Port is located between the studs,
7. Place the Upper Lid so that the Inlet ports are located at the opposite sides of the column perimeter, as shown.
8. Tighten the lids together by holding wrenches on nuts A and C, working around the column perimeter and gradually increasing the force.
9. To open the column, hold the wrenches on nuts B and C.

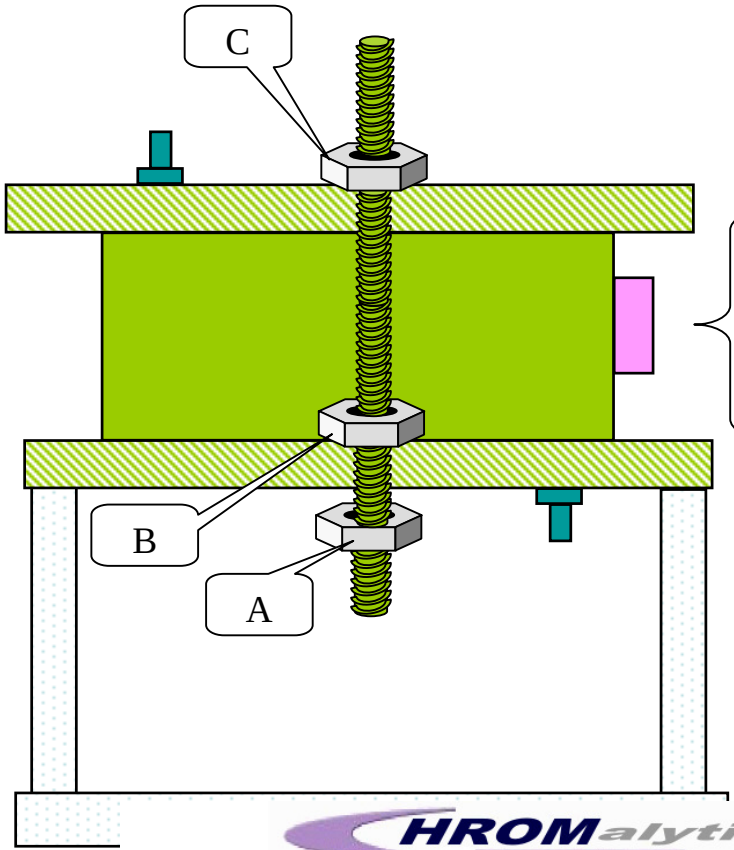

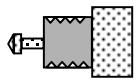

Packing Port Plug

To replace the tip, use the tip from a 3-ml BD-syringe if needed

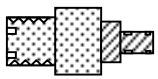

Packing Port Adopter

Adopter connects to female Quick-Disconnect® fitting for slurry packing.

Use replacement O-rings #011 (5/16 x 7/16) and #110 O-ring: (3/8” x 9/16”), if needed.

Recommended Setup for Slurry-Packing of IK Columns

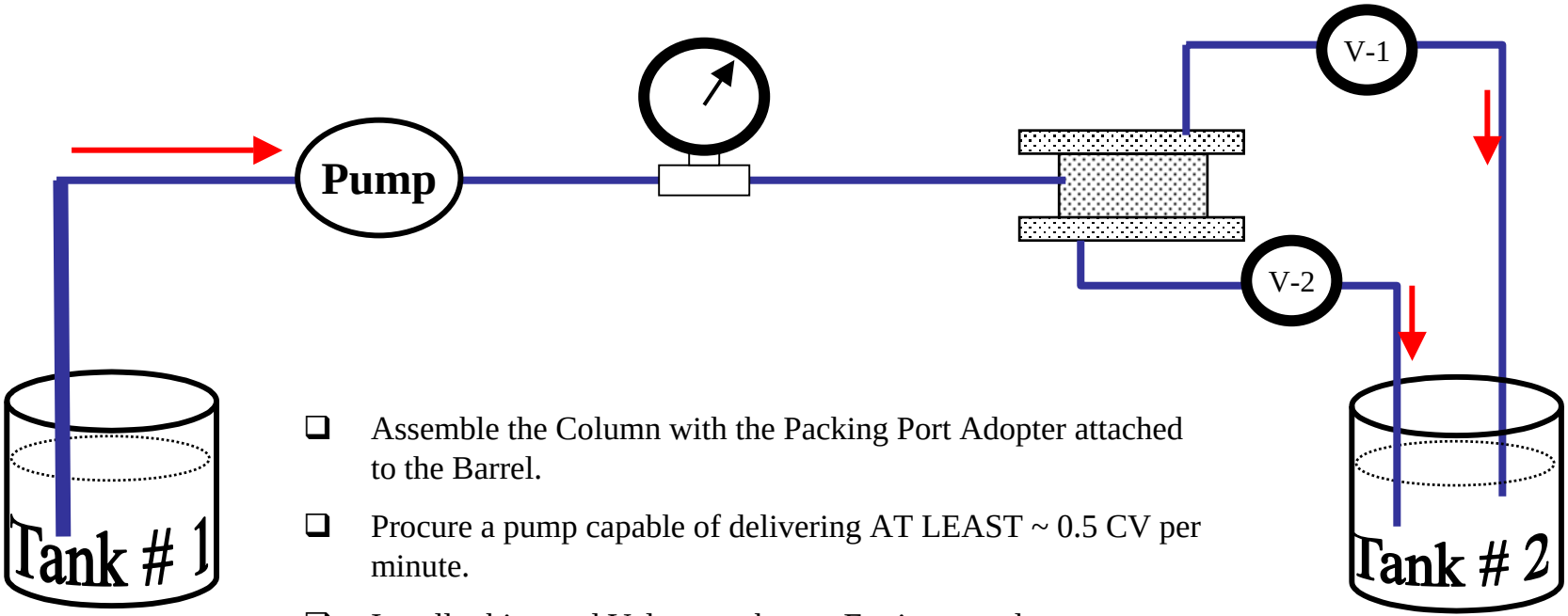

- Assemble the Column with the Packing Port Adopter attached to the Barrel.
- Procure a pump capable of delivering AT LEAST ~ 0.5 CV per minute.
- Install tubing and Valves as shown. For improved process control, use Pressure gauge in a 0-30 PSI (2 bar) range.
- Tank #1: ensure that the intake tubing is SUBMERGED, e.g. use a rigid rod.
- Tank #2: in order to prevent column draining dry, SUBMERGE both tubing tips or position them on the same level.

Recommended Slurry-Packing Procedure for IK Columns

1. Fill the column with PACKING BUFFER to verify proper column assemblage. Note: in most cases WATER can be used as a PACKING BUFFER. Tilting the column and reversing the pump flow can be used to replace all air out of the column. However, any residual air bubbles are usually squeezed out by the sorbent bed at the final stages of packing.
2. Place the sorbent into the Tank#1 and let it sediment in the Packing Buffer. Decant to remove fines and suspended air bubbles. Gently re-suspend to a homogenous 50-75% slurry.
3. Pump the slurry at a flow rate AT LEAST ~ 2.5-FOLD FASTER than the projected operational flow of the column. Note: back-pressure might be the limiting factor for packing of the soft sorbents, e.g. of a 4% non cross-linked Agarose.
4. IMPORTANT: once the sorbent bed fills the column, the back-pressure starts rising ABRUPTLY. Shut down the pump when the pressure is at 15 to30-PSI. Note: over-pressuring of compressible sorbents might result in “fronting peaks”. A slow packing flow and/or insufficient final pressure might result in “tailing peaks”.
5. Close Valves V-1 and V-2. Relax the peristaltic pump to relieve the residual pressure in the tubing*.
6. Replace the Packing Port Adopter with the Packing Port Plug. Avoid trapping in air.
7. Connect the column to the chromatography skid. Verify proper packing by running HETP and peak asymmetry test.

*Note: In our experience, it is difficult to completely clean the tubing from the residual sorbent slurry. We suggest to either discard the tubing after the packing or label it for future re-use with the same sorbent.

Un-Packing of IK Columns

1. Let the column drain. Do not pump air through for safety reasons!

2. Remove the Upper Lid and the Barrel. Scoop out the “sorbent cake”.

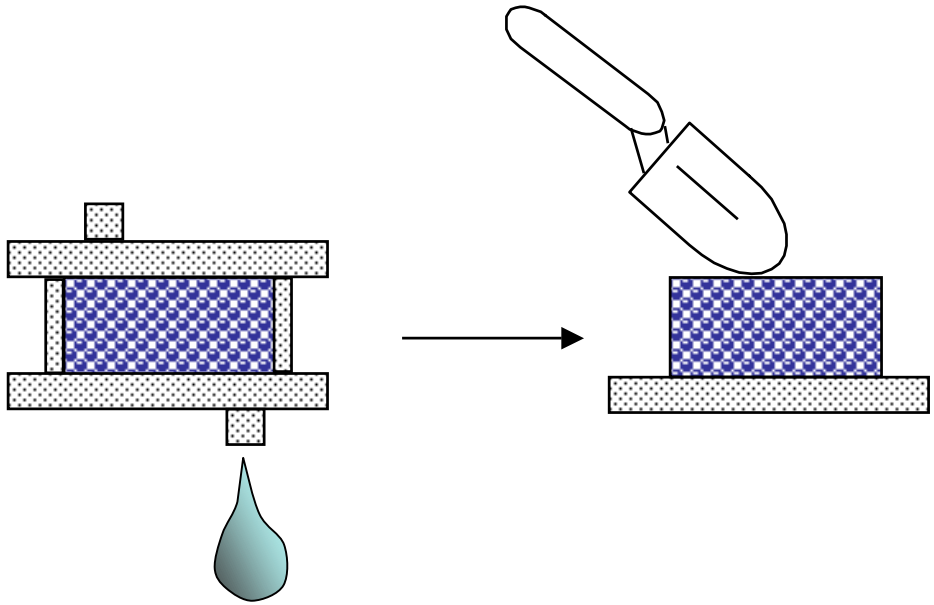

Preparative Pumps Family

This new generation of preparative and process pumps use a very sophisticated three pumps head system (patent pending) design to achieve:

Precise low-pressure quaternary gradient
Noise free flow
Built in recycling
Automated through pump injection

The combination of a third head to a traditional dual head system generates the most noise free preparative pump on the market today (Fig.1).

The reason is that when an operational flow is selected on a pump the flow is created by regulating the flow of solvents through solenoid operated valves. The regulation of these valves can lead to negative and positive pressure peaks with consequent cavitations and bubble formation, especially at high flow rates. This is indicated in (Fig.2).

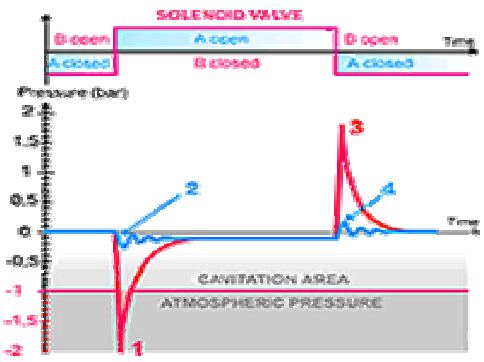

Fig. 2 Pump principle of operation

In conventional system, when the solenoid valve closes, the negative acceleration to stop the liquid flow inside the inlet tubing produces a pressure peak (peak 3) increasing the solenoid valve closure pressure.

The same pressure (peak 1) is then necessary to start the suction in the next cycle. The flow that was stopped needs to accelerate very quickly. This is often impossible and the valve opening time is delayed introducing cavitation and bubble formation. In addition, in this mode of operation the mixture of solvent in gradient mode and flow rate accuracy are reduced.

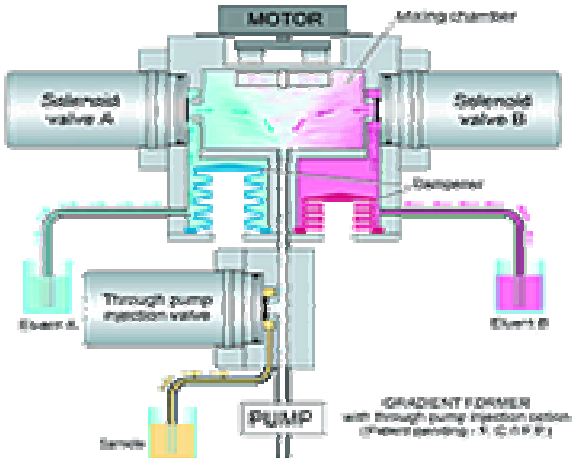

Fig. 1 Pump schematics

The Armen pump family has been especially designed to overcome these problems. A pulse less, constant suction flow is obtained by the incorporation of a third pump head (Patent pending) which ensures that the inlet of the solenoid valves are always supplied with liquid at the same flow rate to produce a constant mixture by avoiding stop and delay of flow (peaks 2 and 4). The conclusion is not only an excellent flow noise in isocratic mode but outstanding performance in gradient mode (fig.3). The result of this innovation is a gradient pump with exceptional accuracy, reproducibility and linearity better than 0.25% from 0.5% to 99.5% solvent ratio.

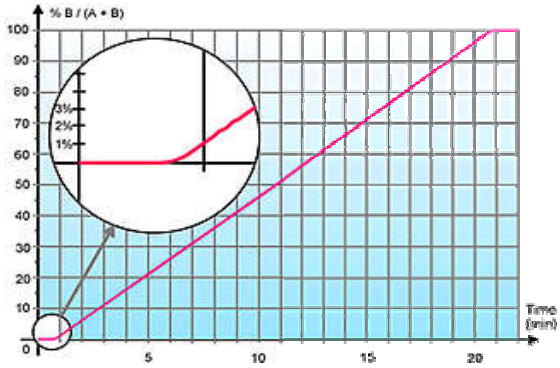

Fig.3 Gradient example

The same principle provides also a very efficient way to work in recycling mode.

AP PUMP FAMILY

Operating Temperature	0° - 40° C for instrument.
Flow calibration	Can be done via the keyboard.
Accuracy and Precision	Maximum accuracy error is ± 0.25%, depending of the solvents and calibration.
Liquid-contact Materials	316 stainless steel/titanium, sapphire/ceramic, ruby, PCTFE, PTFE, PTFE / HDPE.
Injection	Three techniques "Loop injection", "Through-pump-injection" with manual control via the keyboard and "Through-pump-injection" for a programmable volume
Manual and programmed gradient	A flow rate gradient or elution gradient (two, three or four eluents) can be programmed and modified in manual mode at any time during the elution as well as in automatic program.
Fraction collector	At any time during manual operation, the fraction collector (8 ports) and associated valves, when installed may be operated via the keyboard.
Automatic programs	Via the keyboard (on the front panel). Every parameter can be programmed through data transmission (in direct control or downloading).
Electrical Interface	RS 232 and RS 422 Voltage 230/110V, 50 - 60Hz

RODUCT	REFERENCE	FLOW ml/min	MAX. PRESSURE	COMMENTS
2 head pump	AP-1000-200-2	2 to 1000	200bar	For isocratic mode
3 head pump	AP-1000-200-3	2 to 1000	200bar	For gradient mode
2 head pump	AP-2000-100-2	4 to 2000	100bar	For isocratic mode
3 head pump	AP-2000-100-3	4 to 2000	100bar	For gradient mode
2 head pump	AP-4000-050-2	8 to 2000	050bar	For isocratic mode
3 head pump	AP-4000-050-3	8 to 2000	050bar	For gradient mode
Gradient former 1000 - 2000		The gradient former is equipped with a plunger to adjust the dynamic mixing chamber volume. The linearity of the gradient from 0.5% to 99.5% is better than 0.25% for all flow range.		
2 Eluents	GF 1000-2000-2			
3 Eluents	GF 1000-2000-3			
4 Eluents	GF 1000-2000-4			
Gradient former 4000		The gradient former is equipped with a plunger to adjust the dynamic mixing chamber volume. The linearity of the gradient from 0.5% to 99.5% is better than 0.25% for all flow range.		
2 Eluents	GF 4000-2			
3 Eluents	GF 4000-3			
4 Eluents	GF 4000-4			
Inject through pump	INJ-1000 to 4000	Installed on accessories unit ACC 250-500 with GF 250-500 Injected volume from 1ml up to 9999ml by step of 1ml. Installed on accessories unit ACC 100 without GF 250-500		
Inject through pump	INJ-S-1000 to 4000			